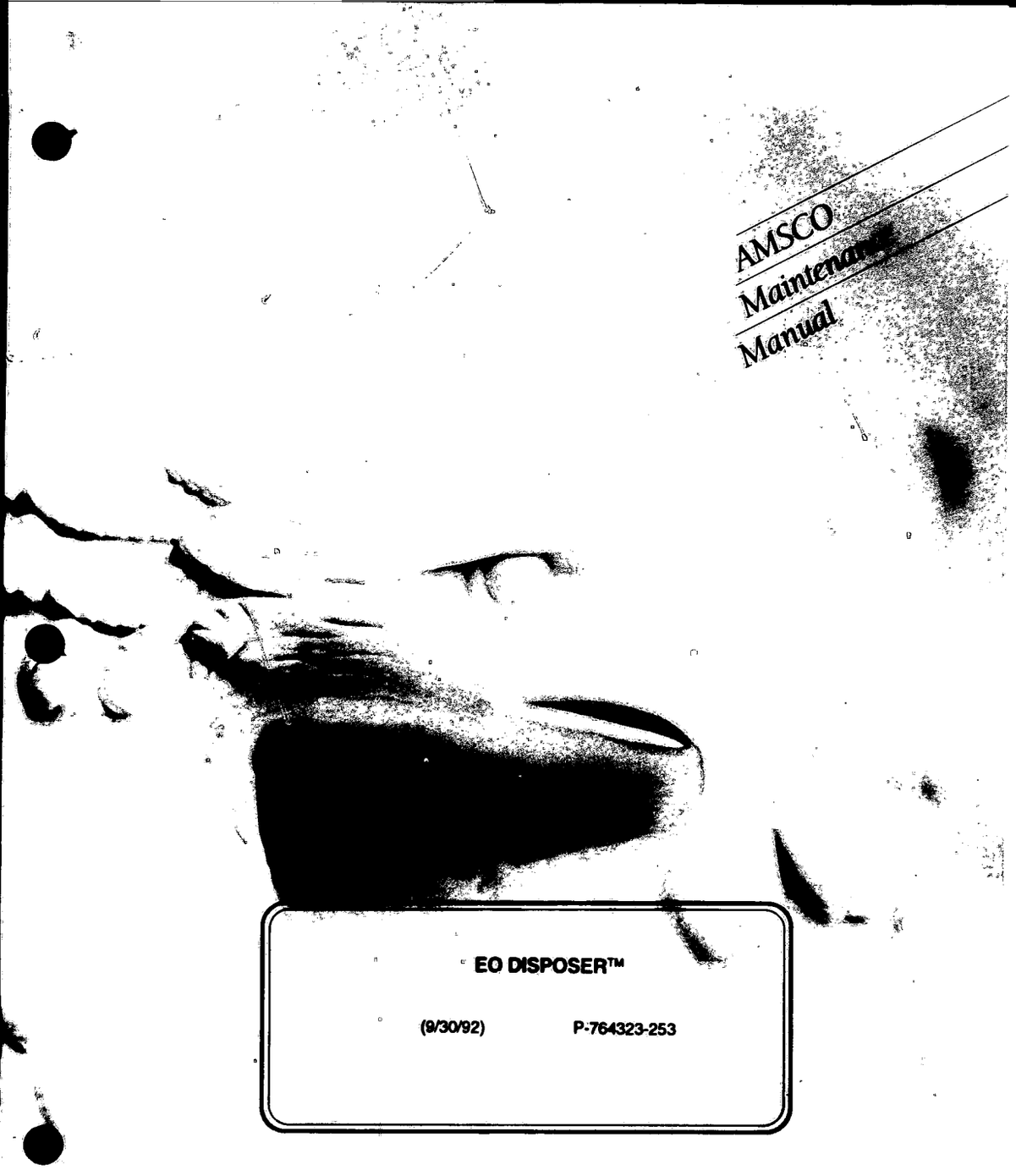

Table of Contents

			Grid
SECTION 1: GENERAL INFORMATION		**1-1**	1A-10
1.1	Application and Design	1-1	1A-10
1.2	Major Components—Disposer System	1-1	1A-10
1.2.1	Sequencer Kit	1-1	1A-10
1.2.2	Additional Materials	1-1	1A-10
SECTION 2: OPERATING INSTRUCTIONS		**2-1**	1A-12
2.1	Sterilizer/Disposer Communications	2-1	1A-12
2.2	General Operation of Sterilizer with EO Disposer	2-1	1A-12
2.2.1	2-1		
2.2.2	2-1		
2.3.	Sterilizer Operation with Disposer	2-3	1A-14
2.3.1	Disposer Operation with Eagle 3000 Series Sterilizers	2-3	1A-14
2.3.2.	Disposer Operation with Eagle 2000 Printcon Sterilizers	2-4	1B-1
2.3.3	Disposer Operation with Eagle 2000 IRC Sterilizer	2-6	1B-3
2.3.4	Disposer Operation with Medallion Sterilizers	2-7	1B-4
2.4	Sequencer — General	2-9	1B-6
2.4.1	Indicator Lights — Sequencer	2-9	1B-6
2.5	Aerators — General	2-10	1B-7
2.6	Disposer	2-10	1B-7
SECTION 3 — PRINCIPLES OF OPERATION		**3-1**	1B-10
3.1	General	3-1	1B-10
3.2	Cycle Description — Disposer	3-1	1B-10
3.2.1	Disposer READY Mode Drop-out	3-2	1B-11
3.2.2	Disposer Outputs	3-2	1B-11
3.2.3	Other Disposer Communications	3-2	1B-11
3.3	Cycle Description — Eagle 3000 Sterilizer Operation with Disposer	3-2	1B-11
3.3.1	General	3-2	1B-11
3.3.2	Disposer On Signal	3-2	1B-11
3.3.3	Exhaust phase	3-3	1B-12
3.3.4	Air Break	3-3	1B-12
3.3.5	Second post vac and air break	3-3	1B-12
3.3.6	Air flush	3-3	1B-12
3.3.7	Water dump	3-3	1B-12
3.3.8	Aeration	3-3	1B-12
3.4	Cycle Description - Eagle 2000 Printcon Sterilizer and Eagle 2000 Indicator Round Chart Recorder (IRC) Sterilizers	3-3	1B-12
3.4.1	Cycle start	3-3	1B-12
3.4.2	Exhaust	3-3	1B-12
3.4.3	First Post Vacuum and Air Break	3-4	1B-13
3.4.4	Second Post Vacuum and Air Break	3-4	1B-13
3.4.5	Air Flush	3-4	1B-13
3.4.6	Water Dump	3-4	1B-13
3.4 7	Aeration	3-5	1B-14

			Grid
3.5	Cycle Description: Medallion Sterilizers 16X16, 20X20, and 24X36	3-5	1B-14
3.5.1	General	3-5	1B-14
3.5.2	Cycle start	3-5	1B-14
3.5.3	Exhaust	3-5	1B-14
3.5.4	Air break	3-6	1C-1
3.5.5	Second post vacuum and air break	3-6	1C-1
3.5.6	Air flush	3-6	1C-1
3.5.7	Water dump	3-6	1C-1
3.5.8	Aerate	3-6	1C-1
3.5.9	Complete	3-6	1C-1
3.5.10	Operator Unloading	3-6	1C-1
3.5.11	Short cycle	3-6	1C-1
3.6	Cycle Description — Sequencer Control	3-6	1C-1
3.6.1	General	3-6	1C-1
3.6.2	Cycle Operation	3-7	1C-2
3.6.3	Alarms and abnormal conditions	3-7	1C-2
3.7	Cycle Description — Aerators	3-7	1C-2
SECTION 4: GENERAL INSPECTION AND MAINTENANCE		**4-1**	1D-6
4.1	General Inspection and Maintenance	4-1	1D-6
4.2	Recommended Preventive Maintanence - AMSCO EO Disposer System	4-2	1D-7
SECTION 5: TROUBLESHOOTING		**5-1**	1D-8
5.1	Troubleshooting Chart	5-1	1D-8
SECTION 6: COMPONENT REPLACEMENT		**6-1**	1D-8
6.1	Adjustment Procedures	6-1	1D-8
6.1.1	Sterilizer Components	6-1	1D-8
6.1.2	Disposer Components	6-1	1D-8
6.2	Component Replacement Procedures	6-1	1D-8
6.2.1	Prefilter	6-1	1D-8
6.2.2	Catalytic Cell	6-1	1D-8
6.2.3	Power Switch Cable Adjustment	6-2	1E-1

SUMMARY OF WARNINGS AND CAUTIONS

Following is a summary of the safety warnings and cautions which must be observed when operating or servicing this equipment. WARNINGS indicate the potential for danger to personnel and CAUTIONS indicate the potential for damage to equipment. These warnings and cautions are repeated, where applicable, throughout the manual.

WARNINGS:

WARNING — EO is released from the drain funnel and from the door by this procedure. Avoid the area around the sterilizer. Insure the Envirogard fan is operational. Use of protective equipment (respirator, eye protection, gloves, jumpsuit) may be necessary.

WARNING — Activating the try lever will require that the access room behind the sterilizer be entered. Protective equipment must be worn. EO will be present in the access room. Do not perform this procedure unless the protective gear is capable of protecting against expected EO levels.

CAUTIONS:

CAUTION — Actuation of safety valve in the manner described above may cause the valve to leak when the sterilizer is put back into service. It will be necessary to leak check the safety valve prior to turning the unit back over to the customer.

THIS PAGE
INTENTIONALLY LEFT
BLANK

AMSCO
EO Disposer System

DESCRIPTION

The EO Disposer System converts ethylene oxide gas into carbon dioxide and water vapor by means of catalytic combustion. An efficiency rate of 99.9% minimizes environmental EO with correct installation.

The system is designed to interface with AMSCO Eagle and Medallion Series gas sterilizers and aerators to remove EO from the equipment exhaust. The Disposer makes any of these straight gas sterilizers function as a sterilizer/aerator. The system consists of a Disposer and an Interconnect to the sterilizer and/or aerator. In multiple-sterilizer installations, a Sequencer allows the Disposer to handle up to three sterilizers and three aerators (maximum 110 cfm) by controlling exhaust flow through the system. (Note: Only two small aerators may be connected to the disposer.)

The Disposer assembly consists of a catalytic cell, pre-filter, vacuum pump, heater and blower. The Disposer uses flameless oxidation to convert EO.

Interconnect kits allow the Disposer to be linked to any model Eagle Series or Medallion Series straight gas sterilizer or aerator. The Interconnect kit includes a printed circuit board which allows the operator to use the Disposer system simply by initiating normal sterilization or aeration procedures. No further operator involvement is needed.

The Sequencer control, if specified, allows one sterilizer at a time to vent to the Disposer, with up to three small or medium sterilizers on the system. The use of a sequencer will lengthen cycle times and productivity may be affected. If aerators are also on the system, they will vent continuously to the Disposer through a separate connection.

STANDARDS

Meets applicable requirements of the following listings and standards and carries the appropriate symbols:

ETL Testing Laboratories, Inc.

Canadian Standards Association (CSA)

Seismic Stress Calculation—Cal. Admin. Code—Title 24.

SYSTEM COMPONENTS

Disposer cabinet houses:

- **Vacuum pump** to provide suction on sterilizer chamber during exhaust and aeration
- **Prefilter** to remove particulate matter from the airstream
- **Blower** to feed air to system
- **Heater** to raise airstream and catalyst temperature to catalytic reaction temperature (280° F [138° C] minimum)
- **Catalytic cell** to remove EO from the airstream through an exothermic (heat-producing) reaction.

Interconnect Kits—Designed to be field-installed on Eagle or Medallion sterilizers. Kit includes piping

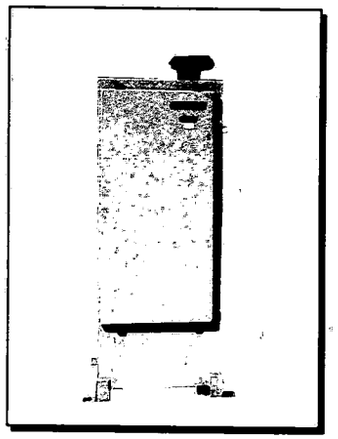

Typical only—some details may vary

THE SELECTIONS BELOW APPLY TO THIS EQUIPMENT

INTERCONNECT KIT (ONE PER STERILIZER OR AERATOR):

- ❑ Eagle 3000 EO Sterilizer
  - ___ Small
  - ___ Medium
- ❑ Eagle 2000 EO Sterilizer with Printcon
  - ___ Small
  - ___ Medium
- ❑ Eagle 2000 EO Sterilizer with Round Chart Recorder
  - ___ Small
  - ___ Medium
- ❑ Medallion EO Sterilizer
  - ___ Small
  - ___ Medium
- ❑ Aerator Kit

OPTIONS:

- ❑ Sequencer (if multiple sterilizers)

Item _____

Location(s) _____

Because of American Sterilizer Company's continuing program of research and development, all specifications and descriptions are subject to change without notice. This data is intended for the exclusive use of AMSCO customers, including architects or designers. Reproduction in whole or in part by others is prohibited.

modifications and a box with control boards, program chips, and wiring. Aerator interconnect kit is to be field-installed on Eagle or Medallion aerators.

Sequencer (optional)—Sends and receives signals to control access to Disposer system in multi-sterilizer installations.

TECHNICAL DATA

Control—System control is designed as part of the Interconnect kit so that the operator can use the Disposer simply by initiating normal sterilization or aeration procedures. No further operator involvement is needed.

Catalyst—The catalyst is proprietary, a granular material composed of manganese dioxide and copper oxide housed in a cell made of type 304 stainless steel approximately 20x20x6 inches (508x508x152 mm) with a 4-inch (102 mm) bed depth. The catalyst removes EO from the airstream through an exothermic (heat-producing) reaction. The amount of temperature increase within the catalytic cell depends upon the concentration of ethylene oxide in the airstream, the flow rate, heat loss and amount of catalyst. The expected life of the catalyst is one to three years, dependent on usage. Spent catalyst is not a hazardous material; but must be disposed of according to local, state and federal regulations.

Vacuum Pump—0.5 hp, nominal 25 inch Hg.

Prefilter—Resistance 1 inch w.g. at 110 scfm.

Blower—Single speed. 0.6 horsepower blower feeds air to system at rate of 110 scfm.

Heater—10 Kw electric, finned tube duct heater heats airstream and catalyst to approximately 280° F (138° C) minimum, the temperature at which catalytic reaction is 99.9% efficient.

Exhaust—Exhaust port from Disposer unit is 5 inch diameter with 5 inch to 6 inch adaptor. Duct for venting to atmosphere is to be provided by others. Idling exhaust temperature is 280° F (138° C). Normal operating exhaust temperature is 450° F (233° C): maximum exhaust temperature is 500° F (260° C). If overtemperature is reached, system will prevent introduction of additional EO to the catalyst until proper operating temperature resumes.

MATERIAL

Disposer Cabinet—NEMA 3 Enclosure; Painted Carbon Steel

Plenum—Aluminized Steel and Painted Carbon Steel

Catalyst Cell—Stainless Steel Type 304

MOUNTING

Electricity—All internal wiring within the Disposer cabinet has been completed at the factory. Customer is responsible for providing 208 V, 60 Hz, 3 Phase, 40 Amp power to the main disconnect located within the Disposer cabinet.

Piping—Piping modifications to existing sterilizers or aerator are provided as part of the Interconnect kit, which is designed to fit specified models. Piping from the sterilizer to the Disposer and exhaust piping from the Disposer are to be supplied by others.

Installation—Disposer has lifting lugs and can be moved with a forklift. Cabinet can be tilted or laid on side (not on front or back) during installation, and meets seismic requirements when properly bolted to building floor or roof.

CYCLES, READOUTS AND ALARMS

All indicators, controls and safety devices are included to assure proper system operation and safety. If used with Printcon and Eagle 3000 sterilizers, the printer tape reflects the elapsed Disposer exhaust and aeration time as part of the cycle summary. Displays for Eagle 3000 and Printcon sterilizers show countdown aeration time remaining. Disposer installation with Printcon and Eagle 3000 sterilizers will add printed alarm messages indicating Disposer readiness, air flow, exhaust and catalyst status. For Eagle Round Chart and Medallion units, a remote alarm box provides this information. The separate interface box (all units) has LED readouts indicating cycle phases for service personnel.

WARRANTY

AMSCO® warrants that each Disposer is carefully tested, inspected and leaves the factory in proper working condition, free of visible defects. Standard coverage includes one (1) year on parts (except expendables) and labor from date of installation. AMSCO representatives can provide full details of the warranty program upon request.

OPTIONAL PREVENTIVE MAINTENANCE AGREEMENT

A coast-to-coast network of skilled and competent specialists can provide periodic PMA inspection and adjustment to assure low-cost peak performance.

ENGINEERING DATA

Size: Nominal 29" wide x 29" deep x 82" high (737x737x2083mm)
Disposer Weight: Nominal 830 lbs (376 kg)
Air Flow: 110 scfm
Processing Capability: 0.034 lbs/min of EO in a continuous flow of 12% ethylene oxide 88% refrigerant mixture

Temperature Specifications:
- Ambient storage/transport: Minus 20° F to 120° F (Minus 29° C to 49° C)
- Ambient Operating Temp. Range: 50° F min – 120° F max (10° C min – 3048° C max)
- Operating temperature:
  Catalyst: 280° F to 450° F (138° C to 233° C)
  Exhaust: 450° F (233° C)
  Overtemperature: 500° F (260° C)
- Heat Loss to Surroundings
  3000 BTU/hr at 70° F (21° C)
  (Disposer only; no exhaust pipe considered)

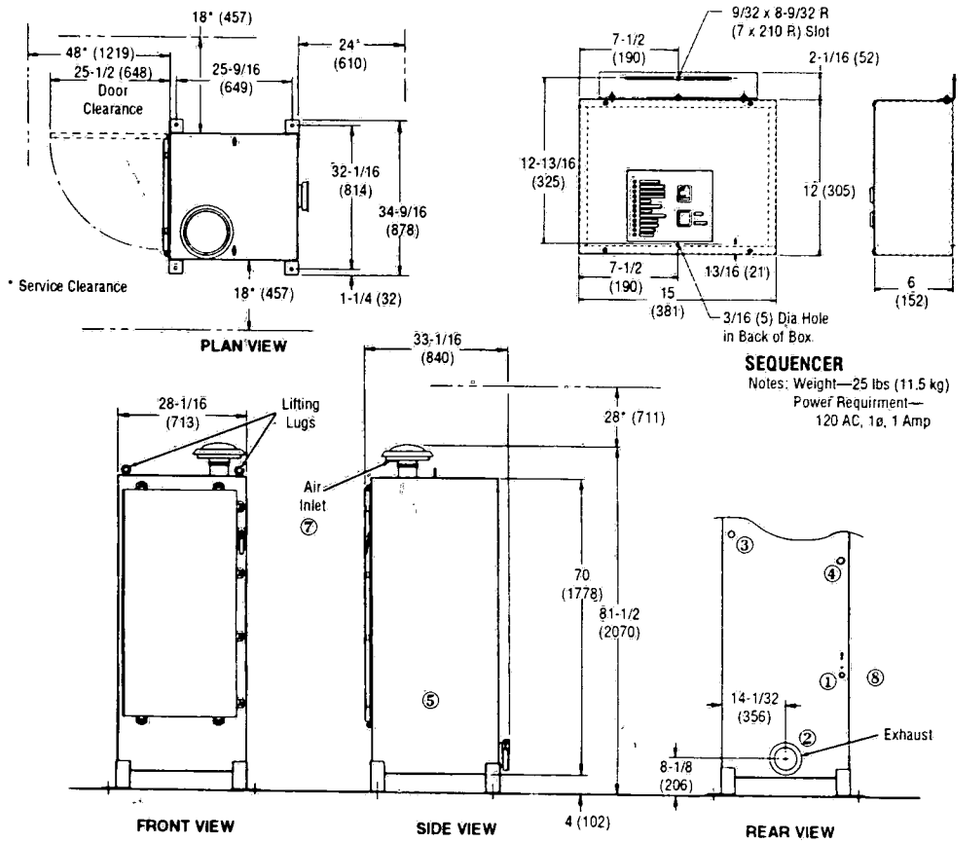

DIMENSIONS ARE INCHES (MILLIMETERS)—DRAWING IS NOT TO SCALE

This print is for guidance when planning space and utility services. Actual installation prints may be obtained from any AMSCO office representative.

OPERATING REQUIREMENTS

① Ethylene Oxide inlet—3/4" NPT

② Exhaust 7-1/8" dia. flange (removable), 5" dia. OD outlet Temperature Range, Ambient: 500° F

③ Electrical—208 VAC, 3 Phase, 60 Hz, 40 Amp

④ Interface with sterilizer 22/24 AWG, 24 VAC, 12 conductor cable (not by AMSCO). House in 1" electrical conduit.

⑤ Optional Catalyst Bed Temperature Recorder—Type J thermocouple connector

⑥ Installation outside the facility must be limited to climates 50°F (10° C) and above. Otherwise disposer must be enclosed in an insulated, heated structure and intake air must be supplied at 50° F (10° C) and above.

⑦ Aerator inlet 4" ODT.

⑧ Piping from sterilizer(s) to disposer 200' maximum. Minimum 5' vertical rise from 3/4" NPT inlet (see 1). Note: The 200' maximum is affected by vertical and horizontal runs and must also reflect losses due to pipe elbows and other fittings. See Equipment Drawing P-65435-332 for installation details.

⑨ For installation details order Installation Guidelines Booklet P-129362-980

. . .CHECK LOCAL CODES. . .

SPECIFICATION WORKSHEET

ITEM_____:Furnish an AMSCO EO Disposer System per Tech Data Sheet SD-433. Furnish Disposer Assembly and Interconnect Kit for: ___ small Eagle 3000 sterilizer with Stage 3 control; ___ medium Eagle 3000 sterilizer with Stage 3 control; ___ small Eagle EO sterilizer with Printcon; ___ medium Eagle EO sterilizer with Printcon; ___ small Eagle EO sterilizer with Round Chart Recorder; ___ medium Eagle EO sterilizer with Round Chart Recorder; ___ small Medallion EO sterilizer; ___ medium Medallion EO sterilizer; ___ Eagle gas aerator. Provide ___ Sequencer option for multi-sterilizer installation.

TYPICAL CONFIGURATIONS
(Details May Vary)

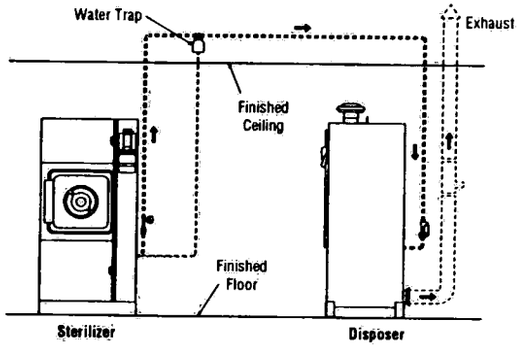

SINGLE STERILIZER WITH DISPOSER

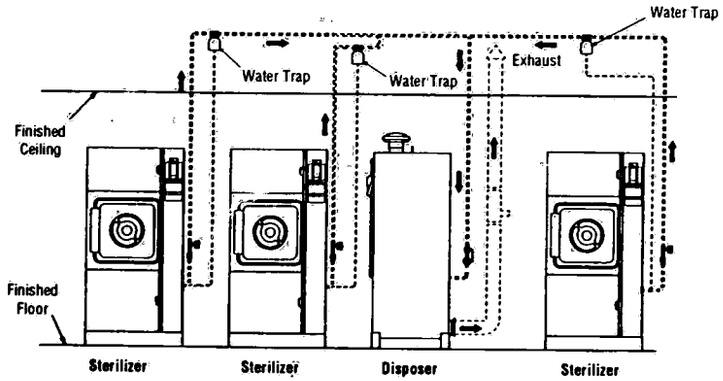

MULTIPLE STERILIZERS WITH DISPOSER

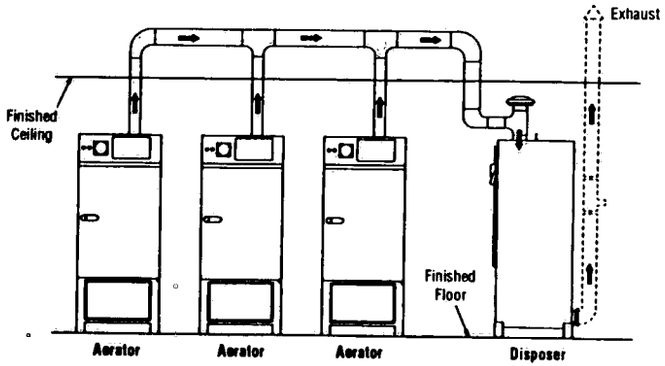

MULTIPLE AERATORS WITH DISPOSER

AMSCO

SECTION 1: GENERAL INFORMATION

1.1 APPLICATION AND DESIGN

The AMSCO EO Disposer System converts ethylene oxide gas into carbon dioxide and water vapor by means of catalytic reaction. The system is designed to interface with AMSCO Eagle and Medallion gas sterilizers to remove EO from the equipment exhaust. The Disposer makes any of these straight gas sterilizers function as a sterilizer/aerator.

The rate of discharge to the Disposer is controlled by the sterilizer and the connecting plumbing. This interface is designed for optimum Disposer performance and maximum destruction of EO. All indicators, controls, and safety devices are included in the system to assure proper system operation and safety.

The AMSCO EO Disposer utilizes a separate vacuum system for exhaust that is not a part of the sterilizer. The sterilizer water ring vacuum pump is necessary for operation of the sterilizer condition but is no longer used during the exhaust phase.

1.2 MAJOR COMPONENTS—DISPOSER SYSTEM

The EO Disposer system consists of several major components that will be briefly described in this section. Details of cycle operation are listed in the Principles of Operation section of this manual. The overall Disposer system consists of the following:

1. Disposer unit
2. Sterilizer piping modifications
3. Sterilizer electrical modifications
4. Sequencer Control (necessary only when connecting multiple sterilizers to one Disposer)
5. Exhaust piping from sterilizer to Disposer
6. Communication wiring between sterilizer and Disposer
7. Exhaust stack for Disposer exhaust

The Disposer is sold as a separate product. To operate a sterilizer with a Disposer requires a modification kit ordered for that particular model sterilizer. The modification kit includes items 2 and 3 above, the piping and electrical modifications needed. Separate kits are used for Eagle series sterilizers, Medallion series sterilizers, and Aeration cabinets.

1.2.1 Sequencer Kit.

In the event more than one sterilizer (maximum of three) is to be connected to the same Disposer, a Sequencer kit will be needed. This Sequencer allows only one sterilizer at a time to exhaust to the Disposer, thus preventing a Disposer from being overloaded with EO.

1.2.2 Additional Materials.

Items 5, 6, and 7 listed in paragraph 1.2 are not supplied by AMSCO and must be obtained locally by the installer. Refer to the Disposer equipment drawing (P-65435-332) for details:

- The exhaust piping between the sterilizer and Disposer is to be as specified in the equipment drawing. 1/4" plugged ports, with shutoff valves, are supplied by AMSCO and are to be located at each end to allow for servicing.
- The communication wiring is to be 12 conductor cable, 22/24 AWG for low voltage (24 VAC) operation.
- The exhaust stack for the Disposer must be capable of handling temperatures up to 500° F. The stack must have a plugged test port for stack sampling. Local codes must be checked for ducting requirements. Refer to the equipment drawing for details.

THIS PAGE
INTENTIONALLY LEFT
BLANK

2.1 STERILIZER/DISPOSER COMMUNICATIONS

The disposer system consists of an AMSCO EO Disposer, one or more AMSCO sterilizers or Aerators, an interface box for each sterilizer and a sequencer assembly for installations with multiple sterilizers. Refer to Figure 2-1 for a block diagram of the disposer system.

2.2 GENERAL OPERATION OF STERILIZER WITH EO DISPOSER

2.2.1

Operation of the sterilizer requires that the Disposer's power switch be ON, signified by "POWER" LED being lit on the sterilizer's interface box.

2.2.2

Cycle selection is handled the same way as with standard sterilizer operation. Sterilizer control automatically turns on Disposer, as signified by "DISPOSER ON" LED lighting up. Note these differences, however:

1. Eagle 2000 and Medallion style sterilizers turn Disposer on when cycle is selected.
2. Eagle 3000 Series sterilizers turn Disposer on upon entering charge phase.
3. Sterilizers equipped with a Disposer run sterilize/aerate cycle only. These units do not run sterilize only cycles. To run a sterilize only cycle it is necessary to perform an AERATE PAUSE or an AERATE ABORT sequence.

   Two situations may occur involving interruption of the aeration process, a PAUSE and a PAUSE/ABORT. (See Figures 2-5, 2-6 and 2-7 for sample printouts and round chart record.)

   AERATE PAUSE is used when it is necessary to remove sterilized goods or biological indicators from the chamber before aeration is complete. This procedure does not change the requirements for aeration time. In order to assure maximum operator safety and minimize the possibility of exposure to ethylene oxide, the chamber is always swept by an air evacuation pulse just prior to allowing the door to be opened.

   AERATE PAUSE/ABORT is used when it is necessary to remove the sterilized load from the sterilizer and transfer it to a separate aerator. The aeration phase of the sterilizer cycle must be aborted to terminate the cycle and initialize the sterilizer control for another cycle start. In order to assure maximum operator safety and minimize the possibility of exposure to ethylene oxide, the same procedure as above is used to initialize the Aerate Pause and then end with Abort.

   Refer to section 2.3 for specific instruction on the aerate pause procedures.
4. The cycle times for a sterilizer equipped with Disposer are extended by the operation of the Disposer. Thus, cycles run longer than for units without a Disposer.
   a. Cycle time is extended approximately 45 minutes for a 16x16-inch or 20x20-inch unit; and approximately 90 minutes for a 24x36-inch unit.
   b. If multiple sterilizers are connected to a Disposer through a sequencer, cycle times may be extended further, but only if sterilizer cycles are started at the same time. The cause of this is the necessary sequencing of the sterilizer exhaust to prevent overloading the Disposer with EO. See chart 2-1 below.

Chart 2-1

Multiple (MAX. 3) EO Sterilizers(s) cycle times with one Disposer when all sterilizers are started simultaneously. (NOTE: Time shown is addtional to standard exhaust phase time.)

EO Gas Sterilizer	(Scenario) Two Sterilizers	(Scenario) Three Sterilizers
20x20x38	Add 95 min to 2nd unit	Add 150 min to 3rd unit
24x36x48	Add 164 min to 2nd unit	Add 256 min to 3rd unit
24x36x60	Add 170 min to 2nd unit	Add 265 min to 3rd unit

For example: If three 20x20x38-inch sterilizers are connected to one Disposer and all machines were started on 130° F Cycle at the same time, cycle times would be:

Sterilizer #1	Sterilizer #2	Sterilizer #3
220 min	315 min (220 + 95)	370 min (220 + 150)

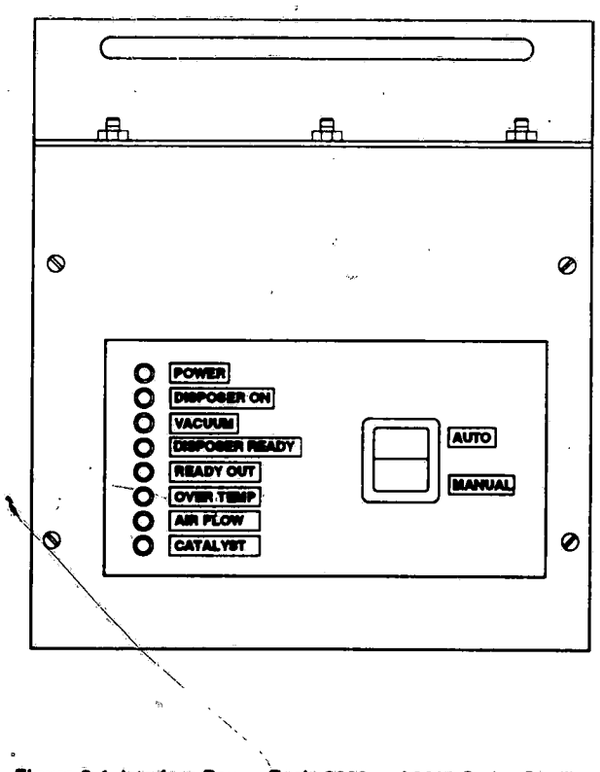

Figure 2-1. Interface Box — Eagle 3000 and 2000 Series Sterilizers

5. Disposer Failure — Goods Locked in Chamber

   If the Disposer should fail to become ready, for any reason, the condition may not be detected until a cycle has begun. The sterilized goods cannot safely be removed from the chamber until the gas has been removed from the chamber. Every attempt should be made to repair the Disposer so that the sterilizer may be exhausted normally. The most probable reasons the Disposer has failed to become ready should be investigated first. See Troubleshooting, Section 5.

   In the event the Disposer cannot be repaired in a reasonable period of time, it is recommended to allow the sterilizer to remain with gas in the chamber until a qualified service representative can repair the Disposer. The sterilizer will not vent gas through any of the valves. As long as the Envirogard fan is operating, there will not be an appreciable amount of EO lost to the atmosphere.

2.3. STERILIZER OPERATION WITH DISPOSER

The AMSCO EO Disposer is completely automatic. The power disconnect switch on the Disposer cabinet door (Figure 2-1) should be left ON at all times except when a qualified technician is servicing the unit. No operator actions are necessary to activate or operate the Disposer. The operator need only initiate the sterilization or aeration procedures in the normal manner. Refer to the Troubleshooting section for more information on causes of alarms.

2.3.1 Disposer Operation with Eagle 3000 Series Sterilizers

1. Interface Box — The sterilizer communicates with the disposer through the interface box. This box is mounted on the sterilizer framework. Eight interface signal lights are located on the Interface Box (see Figure 2-1). The lights signify:

   "POWER" — This indicates that the Disposer on/off switch on the door is in the ON position. The POWER light will be ON even if the sterilizer is off.

   "DISPOSER ON" — This indicates that the sterilizer has sent a signal to the Disposer to turn on.

   "VACUUM" — This indicates that the sterilizer is sending a signal to the Disposer to turn on the vacuum pump.

   "DISPOSER READY" — This indicates that the Disposer has reached the minimum operating temperature and is ready to accept the sterilizer exhaust.

   "READY OUT" — This indicates that the interface box has received the DISPOSER READY signal from the Disposer and has communicated this information to the sterilizer control.

   "OVERTEMP" — This indicates that the Disposer has exceeded 500° F (260° C) and now has shut off. Qualified service personnel will be required to manually reset the Disposer. There are two locations for the manual reset; one is located in the interface box and the other is located in the Disposer. Pressing either resets the Disposer.

   "AIR FLOW" — This indicates that there is insufficient air flow through the Disposer.

   "CATALYST" — This indicates that the temperature achieved in the catalyst bed during the sterilizer exhaust phase did not reach a normal minimum operating temperature (320°F [160°C]).

2. Alarms and Signals — Four alarms are added when the Eagle 3000 sterilizer is interfaced with the Disposer. The following will print at the sterilizer as appropriate:

   "ALARM: DISPOSER NOT READY" — A tone sounds and this message is printed if the Disposer is not ready within 60 minutes after the sterilizer exposure phase is completed. Pressing the #1, #2, #3 or #4 touchpad on the sterilizer column silences the tone while the sterilizer tries to complete the cycle. If the alarm sounds again, call qualified service personnel.

   "ALARM: NO DISPOSER VACUUM" — A tone sounds and this message is printed if insufficient vacuum is drawn in the Disposer inlet piping. This alarm indicates a failure in the vacuum system. Pressing the #1, #2, #3 or #4 touchpad on the sterilizer silences the tone while the sterilizer tries to complete the cycle. If the alarm sounds again, call qualified service personnel.

   "ALARM: DISPOSER LINE RESTRICTED" — A tone sounds and this message is printed if the chamber pressure fails to drop at the beginning of the exhaust phase. This alarm indicates a failure in the exhaust plumbing. Pressing the #1, #2, #3 or #4 touchpad on the sterilizer silences the tone while the sterilizer tries to complete the cycle. If the alarm sounds again, call qualified service personnel.

"CHECK DISPOSER CATALYST" — Printed if the catalytic cell fails to minimum operating temperature. Repeated occurrence of this alarm indicates that the catalytic cell should be replaced. Call qualified service personnel.

3. Aerate Pause and Pause/Abort — Eagle 3000 Sterilizers with Stage 3 Control

The sterilizer must have completed the exhaust phase and entered the aeration phase before an aerate pause or pause/abort can be initiated.

To Pause an Eagle 3000 unit, the operator must:

a. Press the #1 cycle selection touch pad. This causes the control to initiate the air evacuation pulse: "Pause Initiated" and "Wait to open door" messages are displayed on the control.

b. After the pulse is completed, an alarm tone sounds. The operator then has 5 minutes to open the door, remove the object and re-close and re-lock the door.

c. When the door is opened, "Close Door to Resume" and "Press Reset to Abort" are displayed alternately on the control and goods may be removed from the chamber,

d. The aeration cycle will resume if the door is reclosed and relocked. Aeration will then continue to completion.

To Pause/Abort an Eagle 3000 unit, the operator must:

a. Press the #1 cycle selection touch pad. This causes the control to initiate the air evacuation pulse: "Pause Initiated" and "Wait to open door" messages are displayed on the control.

b. After the pulse is completed, an alarm tone sounds. The operator then has 5 minutes to unlock and open the door.

c. When the door is opened, "Close Door to Resume" and "Press Reset to Abort" are displayed alternately on the control.

d. Press the RESET button while the door is open. The cycle aborts and the display changes to the main cycle selection menu.

2.3.2. Disposer Operation with Eagle 2000 Printcon Sterilizers

1. Interface Box — The sterilizer communicates with the disposer through the interface box. This box is mounted on the sterilizer framework. Eight interface signal lights are located on the Interface Box (see Figure 2-1). The lights signify:

"POWER" — This indicates that the Disposer on/off switch on the door is in the ON position. The POWER light will be ON even if the sterilizer is off.

"DISPOSER ON" — This indicates that the sterilizer has sent a signal to the Disposer to turn on.

"VACUUM" — This indicates that the sterilizer is sending a signal to the Disposer to turn on the vacuum pump.

"DISPOSER READY" — This indicates that the Disposer has reached the minimum operating temperature and is ready to accept the sterilizer exhaust.

"READY OUT" — This indicates that the interface box has received the DISPOSER READY signal from the Disposer and has communicated this information to the sterilizer control.

"OVERTEMP" — This indicates that the Disposer has exceeded 500° F (260° C) and now has shut off. Qualified service personnel will be required to manually reset the Disposer. There are two locations for the manual reset; one is located in the interface box and the other is located in the Disposer. Pressing either resets the Disposer.

"AIR FLOW" — This indicates that there is insufficient air flow through the Disposer.

"CATALYST" — This indicates that the temperature achieved in the catalyst bed during the sterilizer exhaust phase did not reach a normal minimum operating temperature (320°F [160°C]).

2. ALARMS and SIGNALS — Eagle 2000 Series with PRINTCON Control

Four printed alarms are added to the Printcon by the Disposer controls. The following will print at the sterilizer as appropriate:

"ALARM: DISPNRDY" (Not Ready) — A buzzer sounds and this message is printed if the Disposer has not reached operating temperature within 60 minutes after the sterilizer exposure phase is completed. Pressing the Gas Cycle selector on the sterilizer will silence the buzzer and allow the Disposer to try and reach operating temperature


```
--- H I G H   T E M P ---

CYCLE START AT   9:53:31A
             ON  10/05/90

CYCLE COUNT      00303
  OPERATOR
STERILIZER

   STER TEMP = 130.0 F
     PREHEAT =    20 M
    STER TIME =  0:05 H:M
  AERATE TIME =  2:00 H:M

                        P=psig
- TIME        T=F      V=inHg
H  9:53:32A  127.8  0.0P
C 10:13:30A  131.1  0.0P
C 10:24:55A  130.4 26.6V
C 10:28:07A  129.8 26.6V
C 10:31:22A  128.7 26.6V
C 10:34:29A  127.2 26.6V
S 10:43:06A  130.2  8.5P
E 10:48:05A  128.5  8.7P
E 11:03:44A  127.5 22.0V
E 11:04:20A  130.5  1.9V
E 11:11:54A  125.9 22.0V
E 11:12:31A  132.0  1.9V
A 11:34:18A  132.1  0.0P
* SET AERATION TIME
COMPLETED AT     1:44:05P
Z  1:50:07P  139.6  0.7V

LOAD                100501

  TEMP MAX=130.2 F
  TEMP MIN=128.3 F

PREHEAT      = 0:20:00
CONDITION    = 0:29:36
STERILIZE    = 0:05:00
EXHAUST      = 0:46:14
AERATE       = 2:15:51
TOTAL CYCLE  = 3:56:41

COMPLETE CYCLE   1:50:07P
            ON 10/05/90

=   READY TO UNLOAD   =

* DOOR            1:50:07P
UNLOCKED
```

```
--- H I G H   T E M P ---

CYCLE START AT   9:53:31A
             ON  10/05/90

CYCLE COUNT      00303
  OPERATOR
STERILIZER

   STER TEMP = 130.0 F
     PREHEAT =    20 M
    STER TIME =  0:05 H:M
  AERATE TIME =  2:00 H:M

                        P=psig
- TIME        T=F      V=inHg
H  9:53:32A  127.8  0.0P
C 10:13:30A  131.1  0.0P
C 10:24:55A  130.4 26.6V
C 10:28:07A  129.8 26.6V
C 10:31:22A  128.7 26.6V
C 10:34:29A  127.2 26.6V
S 10:43:06A  130.2  8.5P
E 10:48:05A  128.5  8.7P
E 11:03:44A  127.5 22.0V
E 11:04:20A  130.5  1.9V
E 11:11:54A  125.9 22.0V
E 11:12:31A  132.0  1.9V
A 11:34:18A  132.1  0.0P
P 11:56:18A  131.9  6.7P
X 12:03:43P  131.9  1.0V
D 12:04:01P  131.1  3.6V
* SET AERATION TIME
COMPLETED AT     1:44:05P
Z  1:50:07P  139.6  0.7V

LOAD                100501

  TEMP MAX=130.2 F
  TEMP MIN=128.3 F

PREHEAT      = 0:20:00
CONDITION    = 0:29:36
STERILIZE    = 0:05:00
EXHAUST      = 0:46:14
AERATE       = 2:15:51
TOTAL CYCLE  = 3:56:41

COMPLETE CYCLE   1:50:07P
            ON 10/05/90

=   READY TO UNLOAD   =

* DOOR            1:50:07P
UNLOCKED
```

Figure 2-2. Eagle 3000 with Disposer: Sample Tape

for an additional 60 minutes. If the alarm sounds again, the condition must be checked by qualified service personnel.

"ALARM: DISP FLOW" — A buzzer sounds and this message is printed if the Disposer piping vacuum switch fails to close when sensed. This switch is sensed at the beginning of each vacuum pulse to check the integrity of the connecting piping and the Disposer vacuum pump. If the VS-23 vacuum switch is not activated within 60 seconds, the alarm sounds. This alarm indicates a failure in the Disposer vacuum system. Pressing the Gas Cycle selector on the sterilizer silences the buzzer and the control allows another 60 seconds for the unit to reach VS-23. If the alarm sounds again, the condition must be checked by qualified service personnel.

"ALARM: DISP EXHST" (Exhaust) — A buzzer sounds and this message is printed if the sterilizer has been in exhaust for too long. This alarm indicates a failure in the exhaust plumbing. Pressing the Gas Cycle selector on the sterilizer will silence the buzzer while the sterilizer tries to complete the cycle. If the alarm sounds again, the condition must be checked by qualified service personnel.

"CHECK DISP CATALYST" — Printed if the catalytic cell fails to achieve a minimum operating temperature during exhaust. Repeated occurrence of this alarm indicates that the catalytic cell should be replaced. See section 6.2.2, Catalytic Cell, for replacement procedure.

3. AERATE PAUSE and PAUSE/ABORT — Eagle 2000 Sterilizers with Printcon

To Pause a Printcon unit, the operator must:

a. Wait until the sterilizer is in the Aeration phase ("Aerate" light on the primary panel is lit), or, until time on the primary panel is between 11:00 and 12:00 (if primary panel does not have an "AERATE" light.)

b. Press the GAS cycle button. This will cause the control to initiate the air evacuation pulse. The sterilizer then pulls one post vacuum pulse.

c. After the pulse is completed (approximately 20 minutes), the buzzer sounds for 20 seconds and the aeration time is blanked out. The operator then has 10 minutes to open the door, remove the object and reclose and relock the door.

NOTE: If the door is not opened within 10 minutes, the sterilizer will continue the cycle automatically.

d. When the door is opened, "ALARM: DOOR OPEN" will print and the indicator will light. Goods may be removed from the chamber.

e. The aeration cycle will resume if the door is reclosed and relocked, and will continue until the cycle is complete.

f. If the door is left opened for more than 10 minutes, the buzzer will sound. If the cycle is to be continued, close and lock the door. The buzzer will cease, and the cycle will resume.

To Pause/Abort a Printcon unit, the operator must:

a. Wait until the sterilizer is in the Aeration phase ("Aerate" light on the primary panel is lit), or until time on primary panel is between 11:00 and 12:00 (if primary panel does not have an "AERATE" light.

b. Press the GAS cycle button. This will cause the control to initiate the air evacuation pulse. The sterilizer then pulls one post vacuum pulse.

c. After the pulse is completed (approximately 20 minutes), the buzzer sounds for 20 seconds. The operator then has 10 minutes to press the gas cycle select button.

d. When the gas cycle select button is pressed, the complete lamp and cycle complete buzzer will come on for 90 seconds or until the door is opened. The Cycle Summary will print.

NOTE: Do not press RESET.

e. If the door is not opened within 10 minutes, the cycle will continue automatically.

2.3.3 Disposer Operation with Eagle 2000 IRC Sterilizer.

1. Interface Box — The sterilizer communicates with the disposer through the interface box. This box is mounted on the sterilizer framework. Eight interface signal lights are located on the Interface Box (see Figure 2-1). The lights signify:

"POWER" — This indicates that the Disposer on/off switch on the door is in the ON position. The POWER light will be ON even if the sterilizer is off.

"DISPOSER ON" — This indicates that the sterilizer has sent a signal to the Disposer to turn on.

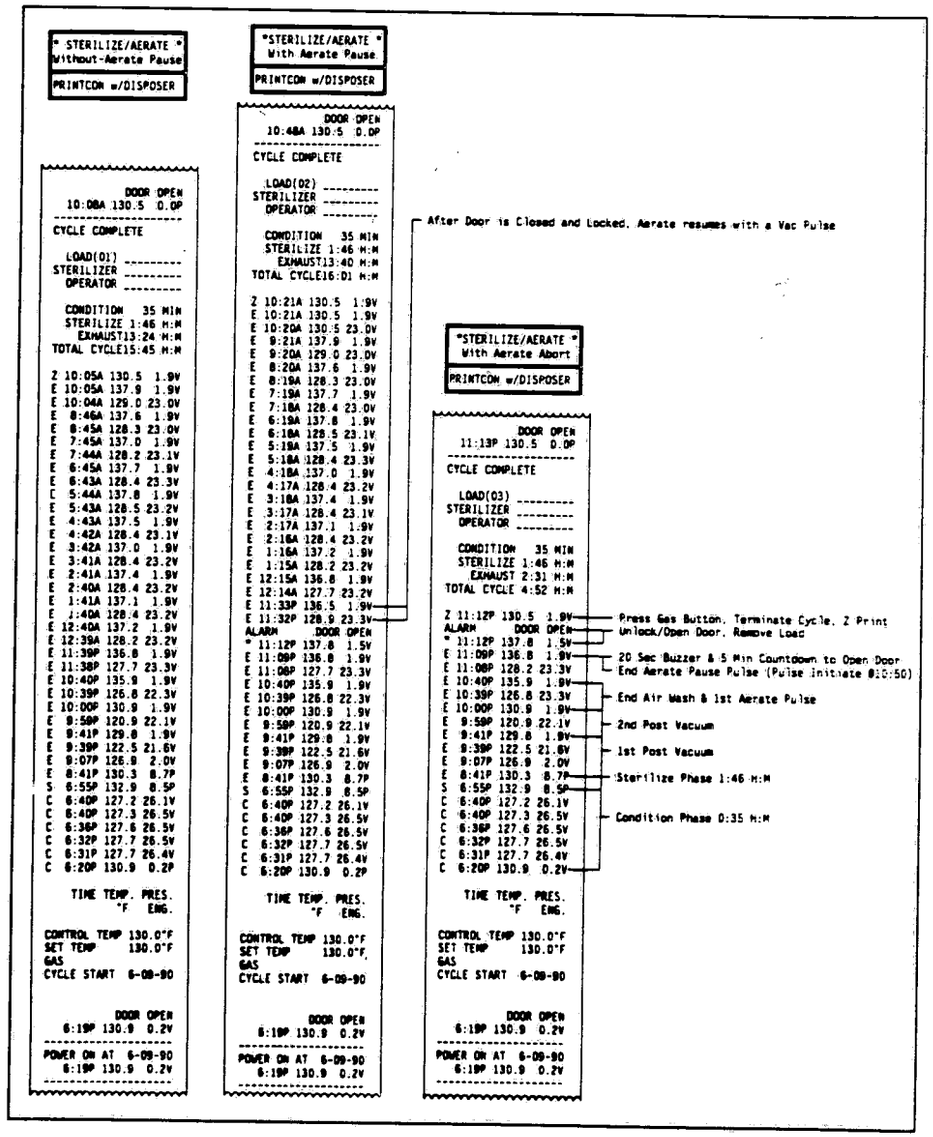

Figure 2-3. Printcon with Disposer: Sample Tape

"VACUUM" — This indicates that the sterilizer is sending a signal to the Disposer to turn on the vacuum pump.

"DISPOSER READY" — This indicates that the Disposer has reached the minimum operating temperature and is ready to accept the sterilizer exhaust.

"READY OUT" — This indicates that the interface box has received the DISPOSER READY signal from the Disposer and has communicated this information to the sterilizer control.

"OVERTEMP" — This indicates that the Disposer has exceeded 500° F (260° C) and now has shut off. Qualified service personnel will be required to manually reset the Disposer. There are two locations for the manual reset; one is located in the interface box and the other is located in the Disposer. Pressing either resets the Disposer.

"AIR FLOW" — This indicates that there is insufficient air flow through the Disposer.

"CATALYST" — This indicates that the temperature achieved in the catalyst bed during the sterilizer exhaust phase did not reach a normal minimum operating temperature (320°F[160°C]).

2. ALARMS and SIGNALS — A remote alarm box (see Figure 2-4) is mounted near the sterilizer to provide an audible and visual indication of the following alarm conditions:

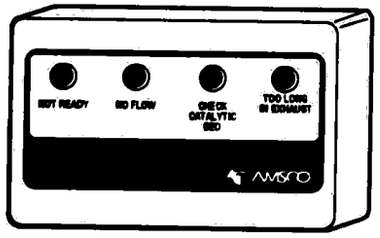

Figure 2-4. Remote Alarm Box — Eagle 2000 IRC Sterilizers

"NOT READY" — A buzzer in the sterilizer sounds and this lamp lights if the Disposer has not reached operating temperature within 60 minutes after the sterilizer exposure phase is completed. Pressing the Gas Cycle selector on the sterilizer silences the buzzer, allowing the Disposer to try and reach operating temperature for an additional 60 minutes. If the alarm sounds again, the condition must be checked by qualified service personnel.

"NO FLOW" — A buzzer sounds and this lamp lights if the Disposer piping vacuum switch fails to close when sensed. This switch is sensed at the beginning of each vacuum pulse to check the integrity of the connecting piping and the Disposer's vacuum pump. If the VS-23 vacuum switch is not activated within 60 seconds, the alarm sounds. This alarm indicates a failure in the Disposer vacuum system. Pressing the Gas Cycle selector on the sterilizer will silence the buzzer and the control allows another 60 seconds to reach the VS-23 set point. If the alarm sounds again, the condition must be checked by qualified service personnel.

"CHECK CATALYTIC BED" — This lamp lights if the catalytic cell fails to achieve a minimum operating temperature during exhaust. Repeated occurrence of this alarm indicates that the catalytic cell should be replaced. See section 6.2.2, Catalytic Cell, for replacement procedure.

"TOO LONG IN EXHAUST" — A buzzer sounds and this lamp lights if the sterilizer has been in exhaust too long, indicating a failure in the exhaust plumbing. Pressing the Gas Cycle selector on the sterilizer will silence the buzzer while the sterilizer tries to complete the cycle. If the alarm sounds again, the condition must be checked by qualified service personnel.

3. AERATE PAUSE and PAUSE/ABORT — Eagle 2000 with IRC

To Pause an IRC unit, the operator must:

a. Wait until the sterilizer is in the Aeration phase ("AERATE" light on the primary panel is lit).

b. Press the GAS cycle button. This causes the control to initiate the air evacuation pulse. The sterilizer then pulls one post vacuum pulse.

c. After the pulse is completed (approximately 20 minutes), the buzzer sounds for 20 seconds and the aeration time is blanked out. The operator then has 10 minutes to open the door, remove the object and reclose and relock the door.

d. When the door is opened, the "DOOR UNLOCKED" lamp lights and goods may be removed from the chamber.

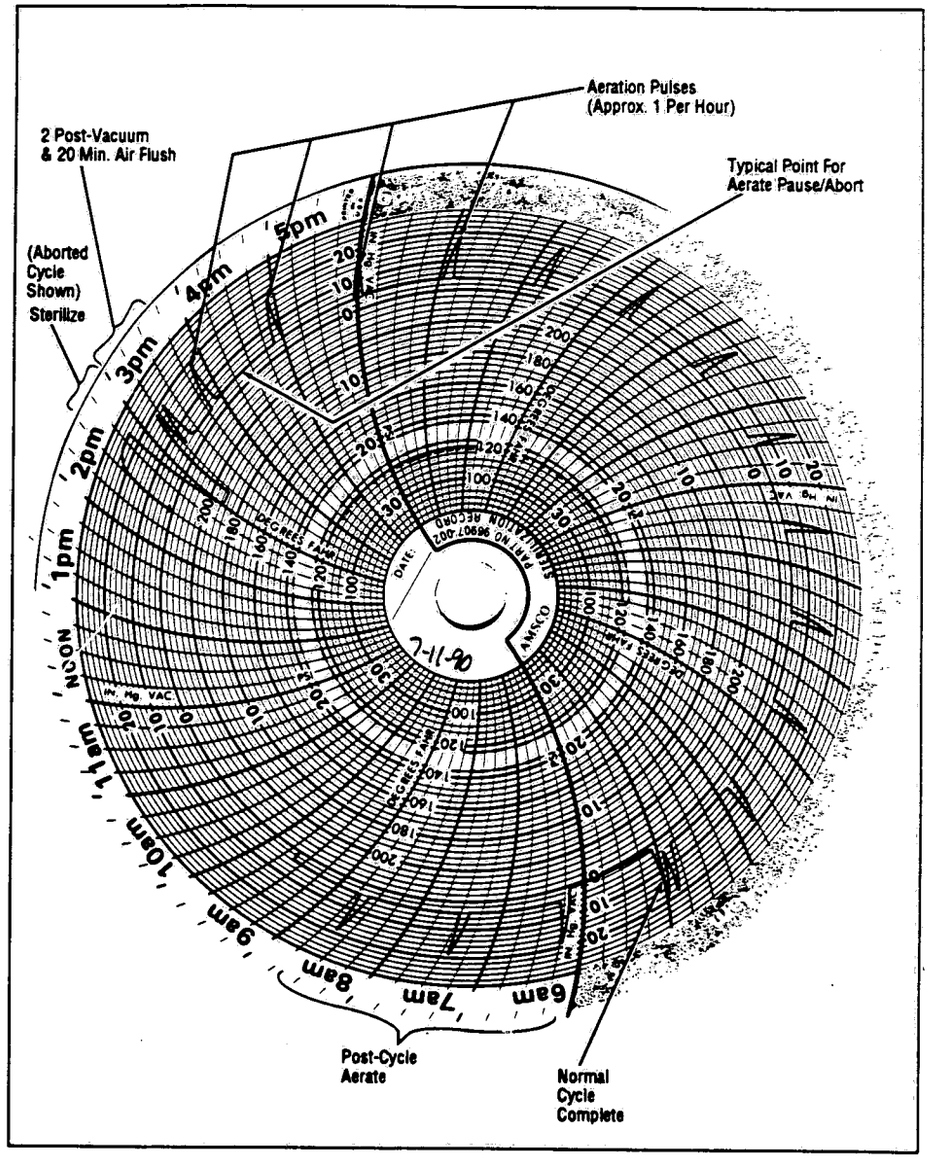

Figure 2-5. IRC Sterilizer with Disposer: Sample Chart

e. The aeration cycle resumes if the door is reclosed and relocked, and continues until the cycle is complete.

f. If the door is left opened for more than 5 minutes, the buzzer sounds. If the cycle is to be continued, close and lock the door. The buzzer ceases, and the cycle resumes.

To Pause/Abort an IRC unit, the operator must:

a. Wait until the sterilizer is in the Aeration phase ("AERATE" light on the primary panel is lit).

b. Press the GAS cycle button. This causes the control to initiate the air evacuation pulse. The sterilizer then pulls one post vacuum pulse.

c. After the pulse is completed, the buzzer sounds for 20 seconds. The operator then has 10 minutes to press the gas select button.

d. When the GAS select button is pressed, the complete lamp and cycle complete buzzer sounds for 90 seconds, or until the door is opened.

2.3.4 Disposer Operation with Medallion Sterilizers

1. Interface box — The sterilizer communicates with the disposer through the interface box. This box is mounted on the sterilizer framework. Thirteen signal lights are located on the Medallion Interface Box (See Figure 2-7) to signify:

"EXHAUST" — This indicates the sterilizer is in the exhaust phase. The light will go out when the sterilizer is in the aeration phase.

"WATER PURGE" — This light will be on for 60 seconds at the end of the exhaust phase to indicate that the sterilizer vacuum pump is removing water from the drain piping.

"AERATE" — This light indicates the sterilizer is in the aeration phase.

"COMPLETE" — This light indicates the sterilizer has completed the 12-hour aeration and is ready to be unloaded.

"OFF" — This indicates the sterilizer rotary switch is in the OFF position.

"POWER" — This indicates that the Disposer on/off switch on the door is in the ON position. The POWER light will be ON even if the sterilizer is off.

"DISPOSER ON" — This indicates that the sterilizer has sent a signal to the Disposer to turn on.

"VACUUM" — This indicates that the sterilizer is sending a signal to the Disposer to turn on the vacuum pump.

"DISPOSER READY" — This indicates that the Disposer has reached the minimum operating temperature and is ready to accept the sterilizer exhaust.

"READY OUT" — This indicates that the interface box has received the DISPOSER READY signal from the Disposer and has communicated this information to the sterilizer control.

"OVERTEMP" — This indicates that the Disposer has exceeded 500 F (260 C) and now has shut off. Qualified service personnel will be required to manually reset the Disposer. There are two locations for the manual reset; one is located in the interface box and the other is located in the Disposer. Pressing either resets the Disposer.

"AIR FLOW" — This indicates insufficient air flow through the Disposer.

"CATALYST" — This indicates the temperature achieved in the catalyst bed during the sterilizer exhaust phase did not reach a normal minimum operating temperature (320° F [160° C]).

2. ALARMS and SIGNALS — Medallion Series Sterilizers

A remote alarm box (see Figure 2-6) is mounted near the sterilizer to provide an audible and visual indication of the following alarm conditions:

"NOT READY" — A buzzer sounds and this lamp lights if the Disposer has not reached minimum operating temperature within 60 minutes after the sterilizer exposure phase is completed. Pressing the Gas Cycle selector on the sterilizer silences the buzzer allowing the Disposer to try and reach operating temperature for an additional 60 minutes. If the alarm sounds again, the condition must be checked by qualified service personnel.

"TOO LONG IN STEP/NO AIR FLOW" — A buzzer sounds and this lamp either blinks or lights steadily to indicate:

- Blinking Light — Too long in exhaust or air break.
- Steady light — Disposer piping vacuum switch fails to close.

Either condition indicates a failure in the sterilizer exhaust piping or the disposer vacuum supply. Call qualified service personnel.

"CHECK CATALYTIC BED" — This lamp lights if the catalytic cell fails to achieve minimum operating temperature. Repeated occurrence of this alarm indicates that the catalytic cell should be replaced. See section 6.2.2, Catalytic Cell, for replacement procedure.

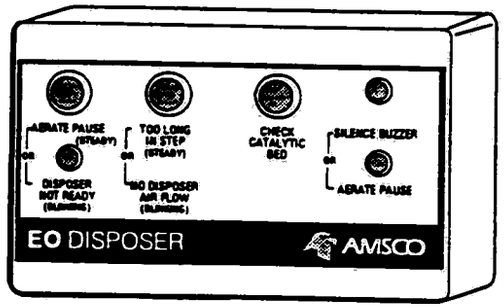

Figure 2-6. Remote Alarm Box — Medallion Sterilizer

"SILENCE BUZZER/AERATE PAUSE" — This button on the remote alarm box allows the operator to silence alarm buzzers or to initiate an aerate pause.

3. Aerate Pause and Pause/Abort — Medallion Gas Sterilizers

To Aerate/Pause a Medallion unit, the operator must first wait until unit is in AERATE, as indicated by the "AERATE" display on the rotary switch on the control panel. Then:

a. Press the SILENCE BUZZER/AERATE PAUSE button. This causes the control to initiate the air evacuation pulse. Note that the AERATE PAUSE/DISP. NOT READY lamp lights steadily at this time.

b. After the pulse is completed, the buzzer sounds for 20 seconds. The operator then has 5 minutes to open the door, remove the object and reclose and relock the door.

c. The aeration cycle resumes if the door is reclosed and re-locked, and continues to cycle completion. If the door is not re-locked within five minutes, the BUZZER begins pulsating, reminding the operator to re-lock the door. The BUZZER silences automatically when the door is re-locked.

Aerate Pause/Abort is used when it is necessary to remove the sterilized load from the sterilizer and transfer it to a separate aerator. The aeration phase of the sterilizer cycle must be aborted to terminate the cycle and initialize the sterilizer control for another cycle start. In order to assure maximum operator safety and minimize the possibility of exposure to ethylene oxide, the same procedure as above is used to initialize the Aerate Pause and then end with Abort.

To Aerate Pause/Abort a Medallion unit, the operator must first wait until unit is in AERATE, as indicated by the "AERATE" display on the rotary switch on the control panel. Then:

a. Press the SILENCE BUZZER/AERATE PAUSE button. This causes the control to initiate the air evacuation pulse. Note that the AERATE PAUSE/DISP. NOT READY lamp lights steadily at this time.

b. After the pulse is completed, the buzzer sounds for 20 seconds. The operator then has 5 minutes to abort the cycle by pressing the SILENCE BUZZER/AERATE PAUSE button.

c. When the SILENCE BUZZER/AERATE PAUSE button is pressed, the control advances to the COMPLETE phase. The STERILIZE lamp lights and the BUZZER sounds for 90 seconds, or until the door is opened.

When the door is opened (or STOP pushbutton pressed, if equipped), the control advances to the OFF/READY position.

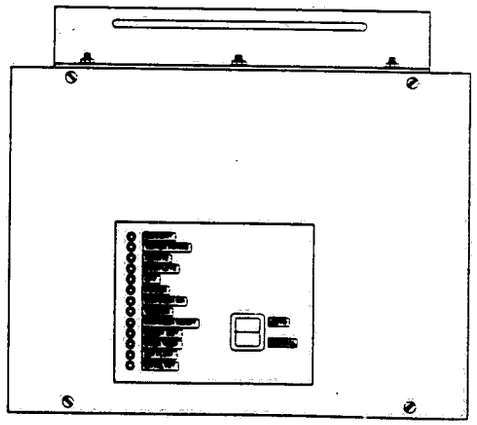

Figure 2-7. Interface Box—Medallion Sterilizer

2.4 SEQUENCER — GENERAL

The POWER and AUTO/MANUAL switches on the Sequencer should be set to ON and AUTO at all times except when a qualified technician is servicing the unit. The Sequencer microprocessor control allows up to three sterilizers and up to three aerators to automatically vent EO to a single AMSCO Disposer. The Sequencer control allows one sterilizer at a time to vent to the Disposer. The aerator(s) continuously vents to the Disposer through a separate connection. Multiple aerators are wired and piped in parallel.

The three sterilizers connected to the Sequencer are designated #1, #2 and #3 for reference only because the Sequencer shows no preference or priority among the sterilizers. No modifications are required to the sterilizers when installing a Sequencer system.

2.4.1 Indicator Lights — Sequencer

LED lamps on the front panel of the Sequencer control indicate operational status as follows:

"AERATOR ON" — This indicates that an aerator has been turned on and is sending a signal to the Disposer to turn on.

"STER 1 ENABLE" — This light can be operating in one of three ways. It will be on solid if the sterilizer designated as #1 is exhausting. The light will sequence on for two seconds and then be off for 10 seconds if the sequencer is "scanning" the sterilizer to see if it is ready for exhaust. Finally, the light will blink on and off in one second intervals if sterilizer #1 is ready to exhaust but the Disposer is Not Ready.

"STER 2 ENABLE" — Operation of these lights is same as above, except designated sterilizer is #2.

"STER 3 ENABLE" — Operation of these lights is same as above, except designated sterilizer is #3.

"POWER" — This indicates that the Disposer on/off switch on the door is in the ON position. The POWER light will be ON even if the sterilizer is off.

"DISPOSER ON" — This indicates that a sterilizer has sent a signal to the Disposer to turn on.

"VACUUM" — This indicates that the sterilizer is sending a signal to the Disposer to turn on the vacuum pump.

"DISPOSER READY" — This indicates that the Disposer has reached the minimum operating temperature and is ready to accept the sterilizer exhaust.

"READY OUT" — This indicates that the interface box has received the DISPOSER READY signal from the Disposer and has communicated this information to the sterilizer control.

"OVER TEMP" — This indicates that the Disposer has exceeded 500° F (260° C) and now has shut off. Qualified service personnel will be required to manually reset the Disposer. There are two locations for the manual reset; one is located in the interface box and the other is located in the Disposer. Pressing either will reset the Disposer.

"AIR FLOW" — This indicates that there is insufficient air flow through the Disposer.

2.5 AERATORS — GENERAL

As with sterilizers, the EO Disposer is completely automatic in processing vent air from an aerator. The operator need only initiate normal aeration procedures. The aerator will not begin operation until the Disposer has reached a READY state. Once the Disposer has reached READY, the aerator's HEAT and OPERATING lamps will come on.

2.6 DISPOSER

1. General operation — unit is completely automatic and is controlled by the sterilizer. The only operator involvement is to check that the power switch is ON when operating the sterilizer. The switch should remain ON unless being serviced by a qualified technician.
2. Indicator lights

   Five lights are located inside the Disposer cabinet to signify:

   a. Disposer On — indicates Disposer power is on.

   b. Ready — Disposer has reached minimum operating temp.

   c. Low Air Flow — insufficient air flow through the Disposer.

   d. Oper Limit — Disposer has reached 450° F (232° C).

   e. Overtemp — Disposer has reached 500° F (260° C). This remains latched on until ILPB-1 reset is pressed. The ILPB-1 reset is located next to the overtemp light.

Section 3 — Principles of Operation

3.1 GENERAL

When a sterilization cycle is initiated, the sterilizer will activate the EO Disposer, which then begins heating the catalytic cell. It is necessary for the Disposer catalytic bed to be at operating temperature before processing EO. The time for the catalytic bed to reach operating temperature is dependent on the ambient temperature.

The sterilizer cycle is normal during the condition and exposure phase. After the exposure phase of the sterilization cycle (or if the cycle is aborted after the chamber is charged with gas), the gas mixture in the chamber is vented to the Disposer. Two vacuum pulses are drawn and a 20-minute air wash follows. After the air wash is complete, the sterilizer vacuum pump operates for 60 seconds to remove accumulated moisture in the drain plumbing. Then the sterilizer proceeds to the aeration phase whereby one post vacuum is pulled per hour for a 12 hour period.

As the gas is vented to the Disposer it is mixed with air (see Figure 3-1). The ethylene oxide is removed from the air by the equation: $2CH_2CH_2O + 5O_2$ catalyst $4CO_2 + 4H_2O$ + heat. Ambient air is pulled into the Disposer through the air inlet (1) and the pre-filter (2) by the blower (3). The air then passes through the electric heater (4) where it is heated, and then into the transition plenum (5) where EO is fed into the airstream through a solenoid valve (6). EO is pulled from the sterilizer by vac pump (7). As EO enters the airstream it is diluted by the preheated inlet air and then directed into the catalytic cell (8) where the EO is catalyzed in accordance with the above reaction. The heat given off by this reaction raises the temperature of the catalytic cell and the effluent airstream in proportion to the amount of EO introduced into the stream to a maximum of 500° F (260° C).

From the catalytic cell, air, carbon dioxide and water vapor and refrigerant 12 are discharged through the air outlet (9) to the atmosphere.

The sterilizer regulates the amount of EO released to the Disposer to maintain normal operating temperature well below the maximum allowable temperature. Should an event occur in the Disposer that causes the temperature to rise to the maximum, the Disposer signals the sterilizer that the maximum temperature has been reached and that the Disposer is no longer in the READY status. The sterilizer immediately suspends release of EO to the Disposer until the Disposer cools to approximately 440 F and the Disposer Overtemp Reset is pressed. After cooling, the Disposer signals the sterilizer that it is again READY and the process resumes.

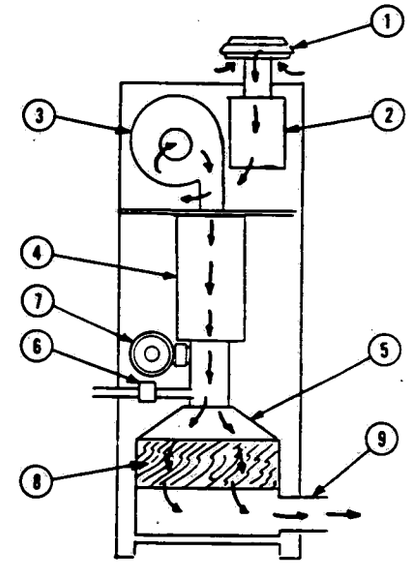

Figure 3-1. Disposer Air Flow

3.2 CYCLE DESCRIPTION — DISPOSER

Refer to Disposer electrical schematic (Donaldson P19-3610, sheet 2.)

Incoming 208 VAC passes through a door safety interlock switch and feeds the blower contactor M1, heater contactor R1, a 208/220 VAC step up transformer for the vacuum pump contactor M2, and a 220/110 VAC step down transformer for the Disposer control. The Disposer is turned on by CR6 relay contacts. CR6 coil is powered by the sterilizer control "Disposer On signal" or by the LS-2 service by-pass switch (located by the door hinge).

When CR6 contacts close, the "Disposer On" light comes on and M1 blower contactor pulls in (causing the blower to operate). M1 is controlled by a 30-

minute timer. This timer keeps the blower running for 30 minutes after the Disposer is shut off. The purpose for this delay is to allow the heaters to cool down properly. With the blower operating, the PS-1 air flow switch contacts close. The air flow switch contacts power up CR1 relay. A red indicating light (indicating Low Air Flow) turns off. The PS-2 switch monitors the differential pressure between the inside and outside atmosphere of the Disposer. When the differential pressure exceeds 1.8" (indicating a plugged filter), PS-2 opens, de-energizing CR1.

The temperature controller in the Disposer (ITG-2600 on the schematic) is a microprocessor device which monitors the catalytic bed temperature using a type "J" thermocouple. The controller has four outputs which control relays CR2, CR3, CR4, and CR5. CR2 is powered when 280° F (138° C) is achieved, CR3 is powered when 320° F (160° C) is achieved, CR4 is de-energized when 450° F (232° C) is achieved, and CR5 is powered when 500° F (260° C) is achieved.

R1 heater control relay is energized through CR1 and CR4 contacts. The heaters energize through R1 relay. R1 relay is controlled by two thermostats. One thermostat, TC-2, is the control thermostat and is set at 320° F (160° C). The other thermostat, TC-1, is an overtemperature safety set at 550° F (270° C). Note the control thermostat has its RTD probe in the chamber just above the catalyst bed, whereas the high limit thermostat has its RTD brazed to the bottom heater element. This latter RTD location is required for electrical codes.

When the catalyst bed reaches 280° F (138° C) the disposer temperature controller powers CR2. CR7 relay is then powered up through CR5, CR2, CR4 and CR1 contacts. A Disposer Ready signal is then sent to the sterilizer through CR7 contacts, the green "READY" light in the Disposer is lit, and FSV-1 EO injection solenoid is energized. FSV-1 solenoid is located in the Disposer. This valve opens to allow the Disposer to accept EO from the sterilizer exhaust piping. If the catalyst bed goes to an excessive operating temperature condition (over 450° F [232° C]), the temperature controller will de-energize CR4 relay. CR4 contacts would then open, causing CR7 to lose power and remove the disposer ready signal to the sterilizer.

When the sterilizer is ready to exhaust, a signal from the sterilizer (Disposer Vacuum) turns on CR8 relay. CR8 contacts close and power up M2 vacuum pump contactor. This allows a vacuum to be pulled in the piping between the disposer and sterilizer.

3.2.1 Disposer READY Mode Drop-out

The disposer will drop its Ready mode if the following conditions occur:

1. Inadequate pressure drop across the catalyst bed (PS-1 opens, de-energizes CR1).
2. Plugged air filter (PS-2 opens, de-energizes CR1).
3. Catalyst bed temperature drops below 280° F (138° C) (CR2 will de-energize).
4. Catalyst bed temperature rises above 450° F (232° C) (CR4 will de-energize).
5. Catalyst bed temperature rises above 500° F (260° C) (CR5 will energize). This acts as a redundant heater shutoff to the 450° F (232° C) switch above.
6. Sterilizer signal to power up the disposer is removed (CR6 will de-energize).

3.2.2 Disposer Outputs

The outputs from the disposer to the sterilizer are as follows:

1. Disposer Ready (CR7 contact)
2. Low Air Flow condition (CR1 contact)
3. Operating temperature (320° F [160° C]) achieved (CR3 contact)
4. Disposer overtemp (500° F [260° C]) (CR5 contact)

3.2.3 Other Disposer Communications

The light panel in the Disposer has five indicating lights:

1. Disposer On - indicates Disposer is turned on by the sterilizer
2. Ready - Disposer has reached minimum operating temp
3. Low Air Flow - insufficient air flow
4. Oper. Limit - Disposer has reached 450° F (232° C).
5. Overtemp - Disposer has reached 500° F (260° C). This will remain latched on until ILPB-1 reset is pressed. The ILPB-1 reset is located next to the overtemp light.

3.3 CYCLE DESCRIPTION — EAGLE 3000 STERILIZER OPERATION WITH DISPOSER

3.3.1 General

The Eagle 3000 control EPROM contains cycle information for operation with the EO Disposer. To access the program it is necessary to actuate Dip switch 3 on the control board to ON. It is then necessary to perform a manufacture's burn-in to load Disposer related programming into the memory.

The 3000 sterilizer also comes with a wiring harness with solenoid coil connectors ready for Disposer plumbing.

To convert the unit to be Disposer compatible a drain line modification is installed and a electrical interface box is installed.

3.3.2 Disposer On Signal

The Eagle 3000 control does not turn on the EO Disposer until the sterilizer starts its charge phase. This is different from the Eagle 2000 and Medallion sterilizers, which start the Disposer as soon as a cycle is selected. The reason for this is that the 3000 will not abort to a Exhaust phase unless EO has been admitted to the chamber. If the reset button is pressed before EO is admitted to the chamber, the control will simply cause the chamber to air break. Once EO is admitted, pressing the reset button will cause the unit to progress through the two post vacuums and air wash before the door can be opened.

3.3.3 Exhaust phase

At the completion of the exposure phase the sterilizer will progress to exhaust. First the control will check for a Disposer Ready signal from wire 65 from the interface box. If present, the sterilizer control turns on the Disposer vacuum pump and the S35 gas purge line solenoid valve. On some early units the purge line transducer measures the vacuum level in the exhaust line. On current units a separate VS-23 vacuum switch is used. If 180 mm Hg (approx 23" Hg) is measured within 60 seconds, the control will then close S35, it will energize S41 exhaust valve, and the Disposer vacuum pump then pulls a vacuum on the chamber.

At 10" Hg as measured by the chamber transducer, on 24x36 units a second exhaust valve, S42, opens allowing a faster exhaust rate. The Disposer vacuum pump continues to pull down until 180 mm Hg (approx 23" Hg) as measured by the chamber transducer, is reached in the chamber. At that point the unit goes to Air Break.

3.3.4 Air Break

The Disposer vacuum pump turns off and S41 (and S42 on 24x36 units) turn off. The filtered air valve S1 turns on to let the chamber break to VS2 setting.

3.3.5 Second post vac and air break

The unit pulls a post vacuum and air breaks in the same manner as the first, except on 24x36 units where S42 opens at the same time as S41.

3.3.6 Air flush

At the end of the second air break the Disposer vacuum pump turns back on and the S1 valve remains on. This occurs for a preprogrammed 20 minute time period.

3.3.7 Water dump

At the end of the 20 minute air flush, the control turns off the Disposer vacuum pump, S41 (and S42 on 24x36 units) and the S1 valve. The sterilizer vacuum pump is turned on and S28 is turned on, pulling water from the exhaust piping. This occurs for 60 seconds.

3.3.8 Aeration

The control continues to aeration, pulling a post vacuum in the same manner as above once per hour.

3.4 CYCLE DESCRIPTION - EAGLE 2000 PRINTCON STERILIZER AND EAGLE 2000 INDICATOR ROUND CHART RECORDER (IRC) STERILIZERS

Refer to sterilizer electrical schematic (146653-873 for Printcon units, and 146655-121 for IRC units), disposer electrical schematic, disposer piping schematic, and cycle graph.

Note that all communication between the sterilizer control and the Disposer is made through the interconnect box mounted on the sterilizer. The Disposer Interface board in the Interconnect box provides optical signal isolation between the sterilizer and Disposer. The Disposer provides 24 VAC to the photocouplers. See sterilizer schematic sheet 3 of 3 for reference connection.

3.4.1 Cycle start

The Disposer will be off when the sterilizer is in the off or idle mode. When a cycle is initiated, the Disposer receives a signal from the sterilizer to start up (wire 828 from the sterilizer to the interconnect box). When the Disposer is at its minimum operating tem-

perature (280 F [138 C]) a signal is sent back to the sterilizer, through wire 823 (from the interconnect box to the sterilizer), that the Disposer is Ready to receive EO.

3.4.2 Exhaust

When the exposure phase times out, the sterilizer control waits for the Disposer Ready signal (wire 823 goes to 0 volts DC when Disposer is ready; if Disposer is not ready, wire 823 is at 5 volts DC). If the Disposer is not ready within 60 minutes after the exposure phase is completed, a Disposer Not Ready alarm will occur. Printcon units will print "ALARM: DISPOSER NRDY"; IRC units will display the "DISPOSER NOT READY" light on the alarm signal box. The sterilizer buzzer sounds intermittently. The buzzer will sound until the Disposer is ready. Pressing the GAS button will silence the buzzer until another 60 minutes passes. If still not ready, the alarm occurs again. The buzzer will silence if the Disposer becomes ready.

If the Disposer ready signal is present, the sterilizer sends a signal to the Disposer, through wire 829, to turn on the Disposer vacuum pump. This causes a vacuum to be pulled in the piping between the sterilizer and Disposer. The control checks vacuum switch VS-23 (set at 23" Hg). If the switch is not closed within 60 seconds, indicating 23" Hg has not been reached, the Disposer flow alarm will occur. Printcon units will print "ALARM: DISPOSER FLOW"; IRC units will display the "DISPOSER FLOW" light on the alarm box. The sterilizer will wait until the 23" Hg switch is made before proceeding. This is referred to as the "Vacuum Test". The flow alarm will also sound if VS-23 does not open within 5 seconds after S41/S42, which open during the "Vacuum Test".

With the 23" Hg switch made, the sterilizer turns off the chamber heat (S18), the solenoid valve S41 (sterilizer exhaust) opens, and the sterilizer exhausts to the Disposer. If the chamber fails to reach a specific vacuum level (2" Hg on 20x20 sterilizers, 10" Hg on 24x36 sterilizers) within 60 minutes, a too long in exhaust alarm occurs. Printcon units will print "ALARM: DISP. EXHST"; IRC units will display the "TOO LONG IN EXHAUST" light on the alarm box. An intermittent alarm sounds. The alarm can be silenced by pressing the GAS cycle select button. If the Disposer Ready signal drops out at any time while the disposer vacuum pump is on, the pump is shut off and S41/S42 close until the Disposer Ready signal is restored.

3.4.3 First Post Vacuum and Air Break (Figures 3.2 and 3.3)

On 24x36 sterilizers a second exhaust solenoid valve, S42, opens at 10" Hg to allow a faster exhaust rate. On Printcon units this 10" Hg set point is programmed into the Printcon control and is not adjustable. On IRC units the 10" Hg set point is controlled by the VS-10 vacuum switch.

The chamber exhausts to the VS-23 switch setting (23" Hg). The control allows 40 minutes for the chamber to go from 2" Hg to 23" Hg on 20x20 sterilizers or from 10" Hg to 23" Hg on 24x36 sterilizers; if 23" Hg is not reached within 40 minutes a Disposer flow alarm will occur. The flow alarm will also sound if VS-2 is not activated when 23" pressure is reached during the vacuum pulse. Once 23" is reached, solenoid S41 (and S42 on 24x36 sterilizers) closes, solenoid S1 opens, and the sterilizer air breaks to VS-2 setting (2" Hg).

3.4.4 Second Post Vacuum and Air Break (Figures 3.2 and 3.3)

After reaching VS-2 the second post vacuum begins. The sterilizer looks for the Disposer ready signal. If not present, the control waits for 60 minutes (during this time the sterilizer is waiting for the Disposer ready signal, the chamber heaters will come on to maintain temperature). If still not present at the end of 60 minutes, the Disposer not ready alarm sequence occurs. When the Disposer ready signal is received, the control turns on the Disposer vacuum and looks for the VS-23 switch. If switch is not made within 60 seconds, the Disposer flow alarm sequence occurs. Once the 23" switch is made the chamber heat is turned off and S41 opens, allowing a vacuum to be pulled on the chamber. The 23" switch must deactivate within 5 seconds or the Disposer flow alarm sequence will occur. The sterilizer control allows 40 minutes to pull from the VS-2 setting to VS-23.

After reaching VS-23 switch, solenoid S41 (and S42) closes and S1 opens, allowing the chamber to air break.

At the beginning of the exhaust phase, the control activates a "service pulse", wire 826 to the interconnect box as an input to a flip-flop circuit on the Interface board. If the catalyst bed did not reach an efficient operating temperature (320 F [160 C]) during the post vacuums, this indicates that an insufficient catalytic reaction has taken place. A catalyst check alarm will occur. On Printcon units the printer will print "CHECK DISP CATALYST"; on IRC units the "CHECK CATALYTIC BED" lamp will light up on

the alarm signal box. Repeated occurrences of this printout indicate the catalyst bed requires replacement. If the temperature setting was reached, the service pulse will not set the flip-flop circuit and no alarm will occur. The service pulse is not activated on an aborted cycle.

3.4.5 Air Flush (Figures 3.2 and 3.3)

Upon reaching VS-2 after air breaking, the control turns the chamber heater control on. The control checks to see if the Disposer ready signal is still present. The vacuum pump turns on and a vacuum is pulled in the piping. The 23" Hg switch must be made within 60 seconds. When switch is made, the chamber heat is turned on and solenoids S41 (and S42 on 24x36 sterilizers) and S1 open, allowing the chamber to air flush for 20 minutes. If at any time during the air flush the Disposer ready signal is lost, solenoids S41 (and S42 on 24x36 sterilizers) and S1 will close and the sterilizer will wait for the disposer ready signal before restarting. At the end of 20 minutes, S41 (and S42 on 24x36 sterilizers) closes, allowing the chamber to air break to VS-2. S1 closes when 2" is reached. The chamber heat comes back on to maintain temperature.

3.4.6 Water Dump

At this point there is some condensed moisture in the drain piping that must be removed. The vacuum pump and S7 energize and solenoid S28 opens, allowing the water to be pulled into the vacuum pump. At the end of 60 seconds, S7, S28, and the vacuum pump de-energize.

3.4.7 Aeration (Figures 3.2 and 3.3)

After the air flush and water dump, the aeration phase begins. The exhaust lamp goes off and the aerate lamp comes on. The aerate timer starts the 12-hour count and the sterilizer pulls a vacuum pulse and repeats the pulse once an hour. The chamber temperature is controlled at set point, between the vacuum 1 hour pulses.

At the end of 45 minutes the control pulls a post vacuum. The combination of hold periods and post vacuum pulses continue until the aeration timer times out (the unit will pull a vacuum in the drain piping for 60 seconds prior to each post vacuum to check the integrity of the drain piping). The complete lamp comes on. The sterilizer door is unlocked, and S1 valve energizes for 60 seconds, allowing any remaining vacuum to be broken. If the sterilizer is in a post vacuum when the door is unlocked after aeration is complete, the S1 valve will remain on for 60 seconds after VS-2 is reached. At the end of 60 seconds, the Disposer is turned off.

An "OVERTEMP RESET" pushbutton, located inside the Disposer control assembly, allows qualified service personnel to reset the Disposer control when an overtemperature condition (greater than 500° F [260° C]) occurs in the catalytic bed.

3.5 CYCLE DESCRIPTION: MEDALLION STERILIZERS 16X16, 20X20, AND 24X36

Refer to the following drawings:

146655-103	Elementary diagram for Medallion 16"/20" units
146655-104	Wiring diagram for Medallion 16"/20"
146655-116	Elementary diagram for Medallion 24x36
146655-117	Wiring diagram for Medallion 24x36

The operation of the small and medium Medallion sterilizer when connected to an EO Disposer is essentially the same, with some minor differences when it comes to operation of the sterilizer vacuum pump during the water purge phase. Therefore the following description will apply to both units. Where they are different, those differences are noted.

There are also some minor differences between Envirogard and non-Envirogard equipped units. These changes are also described where applicable.

3.5.1 General

An interface box assembly is mounted to the side of the Medallion sterilizer. This interface box contains a power supply, an Eaglet control board with EPROM, and an interface board. The original Medallion control, with some wiring modifications, will run the sterilizer during the conditioning and sterilize phase, but when the sterilizer enters the exhaust phase, the interface box assembly control takes over.

The Eaglet board has an EPROM which contains the exhaust cycle parameters, the interface board isolates the Eaglet board from the external loads and inputs, and the power supply supplies power to the Eaglet board.

3.5.2 Cycle start

The rotary switch has a wire 837 connected to pin 45, which is hot when the rotary switch is in the off position. This 110 VAC signal is fed to the interface box assembly. When the operator starts a cycle, the rotary switch goes to the pre-vac position. This drops the 110 VAC signal to the interface box assembly. The Eaglet board, seeing the loss of 110 VAC, determines

that a cycle has started, so it then sends an output to the Disposer by wire 907. The Disposer then turns on and heats up.

Exhaust cycle parameters — units with EO Disposer

Summary of Cycle Differences for the various types of sterilizers (Eagle 3000 based on Rev 12)

The operation of an EO sterilizer that is connected to an EO Disposer differs from a non-Disposer equipped unit in that it turns on the Disposer and during the exhaust phase. The turn on sequence is as follows:

1. Eagle 2000 and Medallion units — Disposer ON signal occurs when cycle is started.
2. Eagle 3000 units — Disposer ON signal occurs when sterilizer starts its charge phase.

The sterilizer runs the sterilization phase in the same manner as a non-Disposer equipped unit. At the end of the exposure phase, Disposer related programming takes over. Refer to the cycle graphs.

Disposer Ready check. The sterilizer checks to see if the Disposer Ready signal is present from the Disposer (DISPOSER READY LED is on). If the signal is not there, the sterilizer will wait for up to 60 minutes (programmed in, not adjustable) before alarming. The alarms are as follows:

Eagle 3000 — print out "ALARM: DISPOSER NOT READY"

Eagle 2000 Printcon — print out "ALARM: DISPOSER NRDY"

Eagle 2000 IRC and Medallion units — displays "DISPOSER NOT READY" on the alarm box

The alarm can be silenced by pressing a cycle select button on the Eagle sterilizers or the silence buzzer button on Medallions.

If the Disposer Ready signal is present, the control proceeds to the Exhaust Pipe Vacuum Check.

Exhaust Pipe Vacuum Check. The sterilizer turns on the Vacuum signal (VACUUM LED is on), which commands the Disposer vacuum pump to turn on. A vacuum is pulled in the piping between the Disposer and sterilizer. It must reach a 23" Hg as measured by the VS23 switch within 60 seconds.

If the minimum vacuum is not met within 60 seconds, the following alarms will occur

Eagle 3000 — print out "ALARM: NO DISPOSER VACUUM"

Eagle 2000 Printcon — print out "ALARM: DISPOSER FLOW"

Eagle 2000 IRC and Medallion units — displays "DISPOSER FLOW" on the light box.

The control will try to achieve the minimum vacuum and will alarm each 60 seconds until it is reached.

If unit reaches the minimum vacuum, the control will proceed to Initial Exhaust.

Initial Exhaust. The sterilizer control commands the sterilizer exhaust valve S41 to open, allowing the Disposer vacuum pump to remove EO from the sterilizer chamber. The sterilizer control allows a maximum amount of time for the chamber to exhaust to a specific level, otherwise an alarm will sound. Parameters are:

Eagle 3000 — the control monitors the pressure drop for the first 40 seconds (non adjustable). The pressure in the chamber must drop a minimum of 10 mmHg, or the 3000 control will alarm "ALARM: DISPOSER LINE RESTRICTED". If pressure drops more than 10 mmHg, exhaust will continue.

Then the 3000 control allows 30 minutes (adjustable in the Service Mode from 0 minutes to 59 minutes) to go from exposure pressure to 0.5 psig. If 0.5 psig is not reached, the control goes into a "TOO LONG IN EXHAUST" or TLIE alarm.

Eagle 2000 and Medallion 24x36 units — go from exposure pressure to 10" Hg within 60 minutes (not adjustable) or alarm will occur. Eagle 2000 Printcon units print "ALARM: DISP. EXHST", Eagle 2000 IRC units display "TOO LONG IN EXHAUST" on alarm box, Medallion 24x36 units display "TOO LONG IN STEP" alarm on the alarm box.

Eagle 2000 and Medallion 20x20 units — go from exposure pressure to 2" Hg within 60 minutes (not adjustable) or alarm will occur. Eagle 2000 Printcon units print "ALARM: DISP. EXHST", Eagle 2000 IRC units display "TOO LONG IN EXHAUST" on alarm box, Medallion 24x36 units display "TOO LONG IN STEP" alarm on the alarm box.

If the unit exhausts within the maximum allowable times, the control will continue to exhaust to 23" Hg.

Continuation of first exhaust. The sterilizer then continues to pull first post vacuum. Small sterilizers continue to have the vacuum pulled through the S41 valve, 24x36 units have a second valve, S42, which opens at 10" Hg to allow faster pull downs. The sterilizer control allows a maximum amount of time to reach VS-23 set point, otherwise an alarm will occur. Parameters are:

Eagle 3000 — go from 0.5 psig to VS-23 setting within 1 hour (adjustable in Service Mode from 00:00 to 99:99 hours:minutes) or the control prints "TOO LONG IN EVACUATION" or TLIV.

Eagle 2000 and Medallion 24x36 units — go from 10" Hg to VS-23 setting within 40 minutes (not adjustable) or Eagle 2000 Printcon prints "ALARM: DISPOSER FLOW", Eagle 2000 IRC units display "DISPOSER FLOW" on alarm box, Medallion units display "TOO LONG IN STEP" alarm on the alarm box.

Eagle 2000 and Medallion 20x20 units — go from 2" Hg to VS-23 setting within 40 minutes (not adjustable) or Eagle 2000 Printcon prints "ALARM: DISPOSER FLOW", Eagle 2000 IRC units display "DISPOSER FLOW" on alarm box, Medallion units display "TOO LONG IN STEP" alarm on the alarm box.

If unit reaches VS-23 within the maximum allowable time, the control continues to the First Air Break.

First Air Break. The sterilizer control turns off the Disposer vacuum pump (VACUUM LED goes off), the sterilizer S41/S42 valves deenergize, and the filtered air valve opens, allowing the chamber to break vacuum. Alarm parameters as follows:

Eagle 3000 units — The sterilizer must reach 2" Hg within 4 minutes (not adjustable) or "TOO LONG IN AIR BREAK", or TLIB, occurs.

Eagle 2000 units — current program has no too long in air break alarm.

Medallion units — The sterilizer must reach 2" Hg within 60 minutes (not adjustable) or "TOO LONG IN STEP" will be displayed on alarm box.

Once 2" Hg. is reached, the control proceeds to the Second Post Vacuum.

Second Post Vacuum. The sterilizer control repeats the Disposer Ready check and the Exhaust Pipe Vacuum check, and if OK, turns on the Disposer vacuum pump (VACUUM LED is on), and S41 (and S42 on 24x36 units) turn on. The control allows a maximum amount of time to go from 2" to 23" Hg otherwise an alarm occurs. Alarm parameters are same as those in the Continuation of First Exhaust paragraph except that start point for timing is at 2" Hg.

Control proceeds to the Second Air Break when 23" Hg is reached.

Second Air Break — Operating parameters same as those for the First Air Break. Control proceeds to Air Flush when 2" Hg is reached.

Air Flush — The sterilizer repeats Disposer Ready check and Exhaust Pipe Vacuum check. If OK, the sterilizer filtered air valve, S41 (and S42 on 24x36 units) energize, and the Disposer vacuum pump turn on. For a 20 minute timed period (not adjustable) air is pulled through the chamber. If the Disposer Ready signal is lost at any time during air flush, the sterilizer control will allow 60 minutes for the Disposer Ready signal to return or the alarm sequence in Disposer Ready check will occur. On Eagle 3000 sterilizers, if Disposer Ready is lost any time during air flush, upon return of Disposer Ready the control will pull one post vacuum and start another 20 minute air flush.

At the end of the 20 minute air flush the control proceeds to Water Dump.

Water Dump — In order to remove condensed moisture from the drain piping, the control will close S41 (and S42 on 24x36 units), turn off the Disposer vacuum pump, turn on the sterilizer vacuum pump and S28 for 60 seconds (not adjustable).

First Aerate Pulse — Operating parameters same as the Second Post Vacuum.

Aerate Air Break — Operating parameters same as in the First Air Break.

Aerate Hold Period — Sterilizer maintains heat in chamber for 45 minutes. Vacuum level on Eagle 2000 and Medallion units stabilize at approximately 2" Hg, but may vary slightly up or down. Eagle 2000 Printcon sterilizers may print VS-2 set point more than once during hold period if the exact VS-2 setting is crossed over. Eagle 3000 units will pull down to approx 4" after reaching VS-2 set point and will maintain at 2 — 4" Hg during the hold period.

Special Features:

1. Check Catalyst — the sterilizer control must see a Disposer Working signal between the start of exhaust and the beginning of the 20 minute air flush, otherwise a Check Catalyst Alarm will occur.
2. Aerate Pause or Sterilize Only cycles — The only sterilizer that can be set to run a sterilize only cycle is the Eagle 3000. This is done by setting the aerate time to 00:00. Upon completion of the 20 minute air flush, the complete tone will sound and the control allows 10 minutes to unload the chamber. If the chamber is not unloaded within 10 minutes the control proceeds to Aerate.

On Eagle 2000, Medallions, and Eagle 3000's that have aerate time programmed, it is necessary to proceed with an Aerate Pause/Abort sequence. Refer to the operators manual for proper sequence.

3.5.3 Exhaust

The sterilizer exposure timer times out and pulses the rotary switch to the Exhaust position. The interface box assembly sees that the unit is ready to exhaust by a 110 VAC signal from the rotary switch pin 35 via wire 835. The interface box then checks for a Disposer Ready signal on wire 905. If present the interface box turns on the Disposer vacuum pump by wire 908. The control then checks the VS-23 switch (wires 823 and 825). If VS-23 actuates within 60 seconds, the interface box then opens the S41 exhaust valve (wires 803 and 828). The Disposer vacuum pump then pulls a vacuum on the chamber.

On medium sterilizers only, the control checks for actuation of the VS-10 switch (wires 885 and 825). Once VS-10 is actuated, the control then powers up S42 valve (wires 838 and 828).

This opening of S42 allows a faster exhaust rate. The S42 must delay opening until 10" Hg otherwise the Disposer catalyst will overheat. Since the same interface box is used on small sterilizers, a jumper wire is installed at the interface box VS-10 input to allow proper cycling of the control. The reason the jumper is needed is that the control must see actuation of the VS-10 input when VS-23 is reached, otherwise the control will not allow the chamber to air break.

Note that the STERILIZE light on the sterilizer control panel will remain on during the entire exhaust phase.

3.5.4 Air break

Once the chamber reaches VS-23 setting, the interface box turns off the Disposer vacuum pump, turns off the S41 (and S42 on medium units), and turns on the filtered air valve (wire 836).

3.5.5 Second post vacuum and air break

Once the chamber reaches the VS-2 setting, wires 801 and 805 signal the interface box that the chamber is at atmosphere, and the exhaust sequence above is repeated. On medium units the S42 valve now opens at the same time as the S41 valve for the remainder of the cycle.

3.5.6 Air flush

Once the chamber reaches the VS-2 setting, the interface box control checks for the Disposer Ready signal, and if present, turns on the Disposer vacuum pump and filtered air valve in order to perform an air flush. The timing for the 20 minute air wash is internal to the Eaglet board and is not adjustable.

3.5.7 Water dump

At the end of the 20 minute air flush, the interface box assembly control pulses the rotary switch to the Water Dump position via wire 850. The rotary switch wiring then powers up the sterilizer vacuum pump and S28 valve which allows water to be drawn out of the exhaust piping.

There is an input to the interface box control via wire 834 that comes from the rotary switch pin 34. This 110 VAC signal tells the interface box that Water Dump is in process and to start a 60 second timer.

The rotary switch wiring necessary to turn on the vacuum pump and S28 valve is significantly different between the small and medium units. On small units S28 is powered by pin 34 of the rotary switch and the sterilizer vacuum pump is powered by pin 48 of the rotary switch. On medium units both the S28 valve and the motor starter for the vacuum pump are powered by a connection to pin 48 of the rotary switch.

At the end of 60 seconds the interface box again pulses the rotary switch to the next position (Aerate) via wire 850.

3.5.8 Aerate

Once in aerate the interface box assembly control will cause one post vacuum to be pulled each hour for a 12 hour period. At the end of 12 hours the control will pull one additional post vacuum, even if it was less than 60 minutes since the last post vacuum. When this additional post vacuum is completed, the interface control will cause the rotary switch to pulse over to the next step, Complete.

While the rotary switch is in the Aerate position, the AERATING light will be lit on the control panel.

3.5.9 Complete

Once the control has reached the Complete position, the buzzer will sound (wire 882) for 60 seconds. The STERILE light will also come on.

3.5.10 Operator Unloading

On units without Envirogard, the operator must press the STOP pushbutton and the rotary switch will rotate to the OFF position, which turns off the Disposer. The load can then be removed.

On Envirogard equipped units, opening the door will cause the rotary switch to step to the OFF position, turning off the Disposer.

3.5.11 Short cycle

A "short cycle" has been incorporated into the Medallion program to expedite troubleshooting and "checkout". This cycle is selected by pressing and holding the "Silence Buzzer" button on the remote alarm box while powering up, and holding for 3 more seconds. The cycle times are shortened as follows:

20-MINUTE AIR WASH — 2 minutes

45-MINUTE AERATION HOLD — 2 minutes

12-HOUR AERATION — 1 hour

a. SHORT CYCLE INDICATION: During the short cycle test mode, the Disposer Not Ready and Disposer Flow alarm lamps will blink for two seconds every five seconds as a reminder that the unit is in the short cycle mode.

b. EXITING THE SHORT CYCLE: Turn power to the Medallion off and then on again.

3.6 CYCLE DESCRIPTION — SEQUENCER CONTROL

3.6.1 General

A sequencer control is used when there are multiple sterilizers (maximum of 3) for one Disposer. The sequencer is needed because the Disposer can handle a certain amount of EO at any one time so two sterilizers cannot exhaust to the Disposer at once.

The sterilizer interface boxes are connected to one sequencer, and then the sequencer is connected to the Disposer.

The sequencer contains an Eaglet board with EPROM, an interface board, and a power supply that supplies power to the Eaglet board. The front panel has indicator LEDs and a Auto/Manual and On/Off switch.

3.6.2 Cycle Operation

When a sterilizer cycle is initiated (Eagle 2000 or Medallion units) or when the sterilizer enters charge (Eagle 3000) the sequencer receives the Disposer On signal from the sterilizer, and in turn sends a signal to the Disposer to turn it on.

The sequencer programming sees this Disposer On signal from the sterilizer as the signal that the sterilizer is in cycle. The sequencer then starts a "scanning" function. During scanning the sequencer "looks" at the sterilizer(s) in cycle for 3 second every 10 seconds. On the LED display this is indicated by the STERILIZER 1, 2, or 3 LED lighting for 3 seconds every 10 seconds.

When a sterilizer is ready to exhaust, the sterilizer will send a vacuum pump turn on signal to the sequencer (VACUUM LED will be on the interface box). The sequencer sees this signal and locks on to that particular sterilizer. The sequencer will then allow that sterilizer to control the Disposer for its two post vacuums and air wash phase. At that point in the sterilizer cycle, the sterilizer control sounds a buzzer to alert the operator that the load can be removed if a sterilize only cycle is to be run. If the door is not opened, the sterilizer will progress into the aeration phase. At that point, the sequencer will drop that sterilizer from the Disposer and allow the next sterilizer to take the Disposer.

3.6.3 Alarms and abnormal conditions

1. Disposer not ready — if a sterilizer is in the exhaust phase and the Disposer Ready signal is lost, the LED for that particular sterilizer will flash off and on at 1 second intervals and a tone will sound in the sequencer once every second.
2. Time out condition- The sequencer counts VACUUM on signals from the sterilizer to determine where the sterilizer is at in cycle. For example if it sees two VACUUM signals, it knows the sterilizer is in the second post vacuum. The sequencer will normally allow one sterilizer to maintain control of the Disposer until it is ready to go to the aerate phase. However should a sterilizer malfunction and get stuck in some portion of the exhaust phase, the sequencer will time out and switch over to the next waiting sterilizer. The sequencer will not have any visual or audible alarms for this situation. Any alarms that would occur will be shown on the sterilizer display.

3.7 CYCLE DESCRIPTION — AERATORS

The aerator has two relays added to the aerator control. The first relay is powered up when the aerator is powered on. The relay contacts send a signal to the Disposer to turn ON. When the Disposer reaches operating temperature, it turns on the second relay. This second relay turns on the blower and heaters and allows the aerator to operate.

EAGLE 3000 HI - TEMPERATURE 130°F (54°C) CYCLE WITH DISPOSER

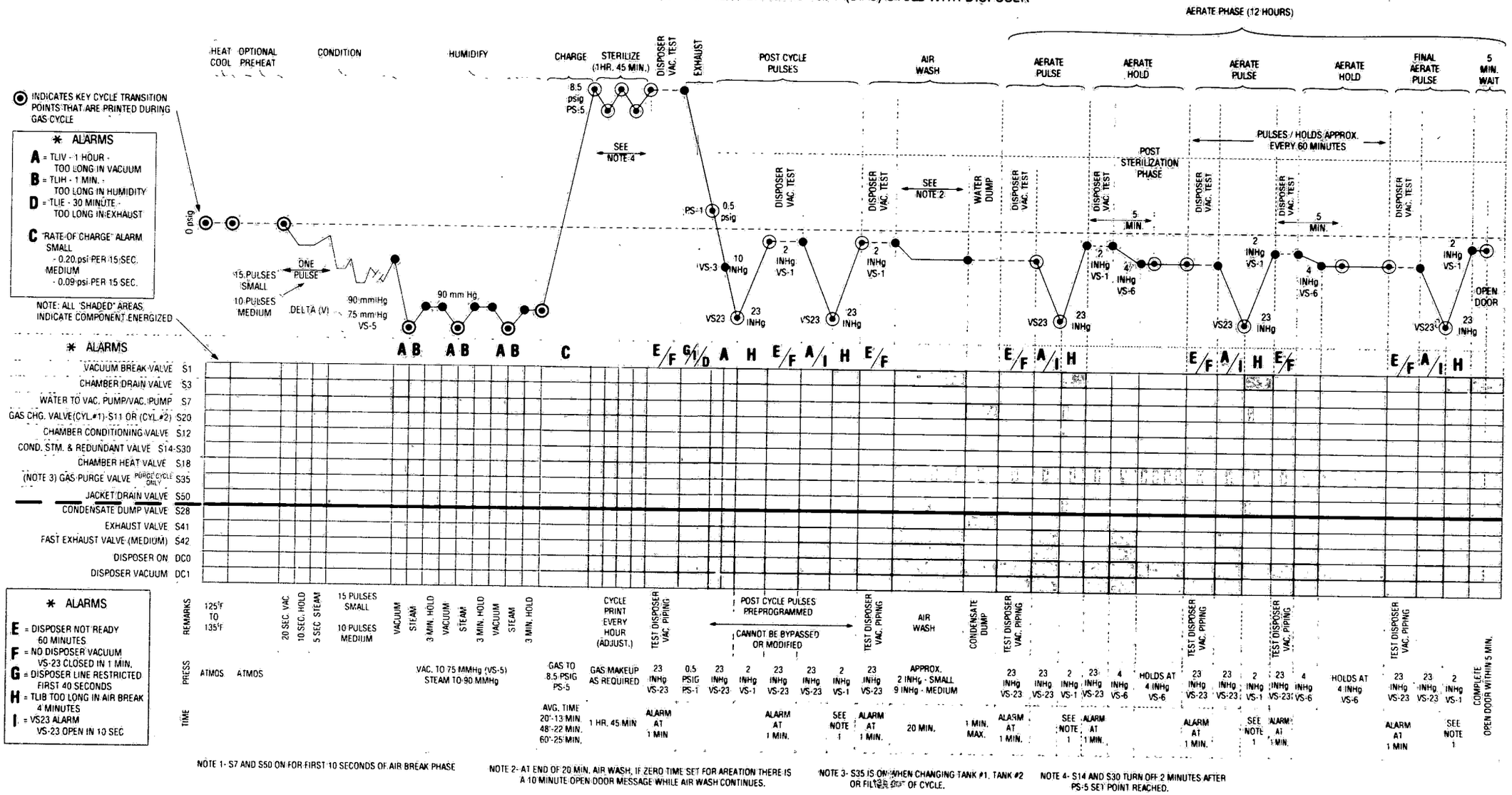

Figure 3-2. Cycle Graph — (Part 1 of 3)
Eagle 3000 Hi-Temperature
130°F (54°C) Cycle With Disposer

EAGLE 3000 LO - TEMPERATURE 100°F (38°C) CYCLE WITH DISPOSER

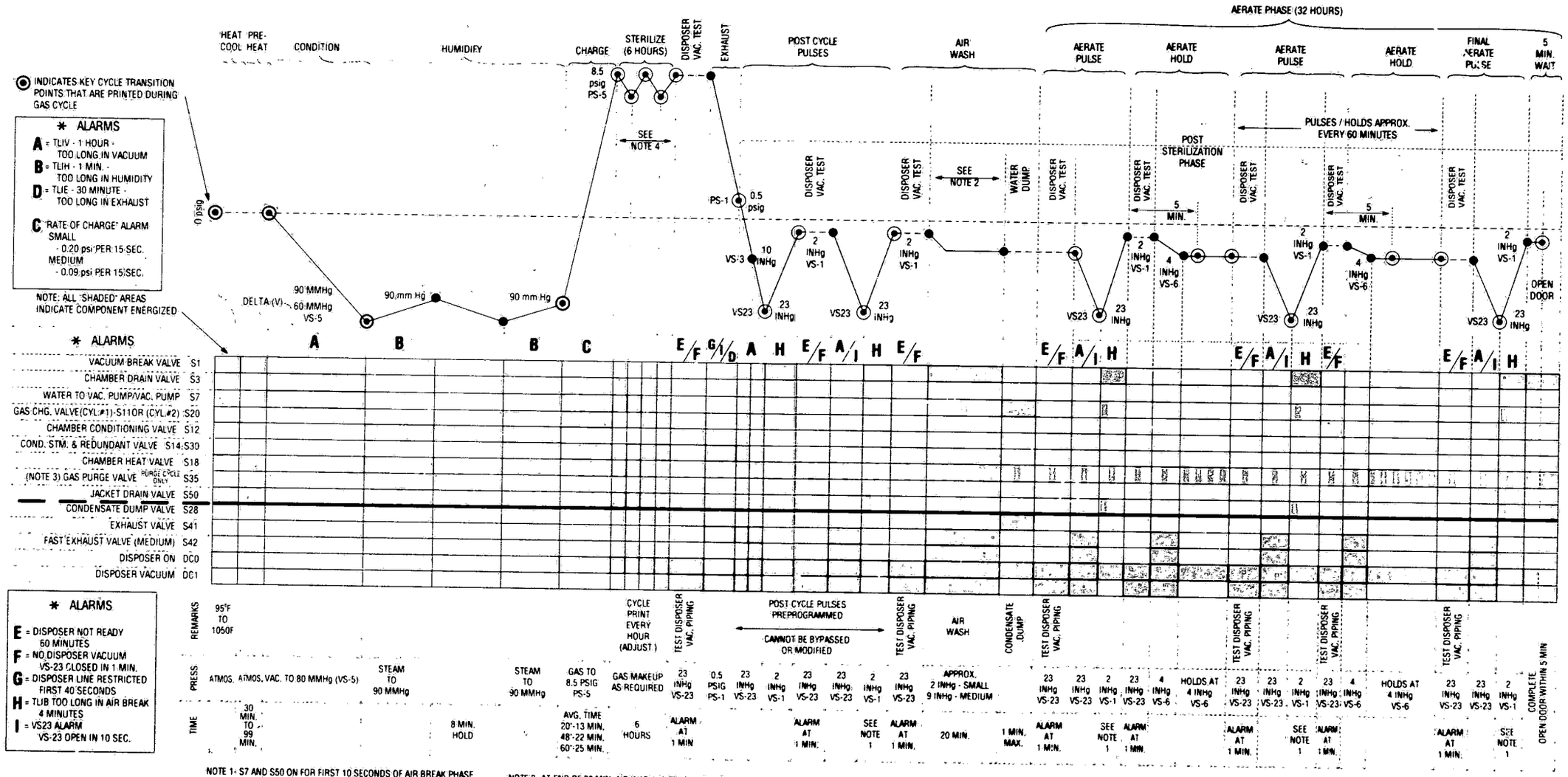

Figure 3-2. Cycle Graph — (Part 2 of 3)
Eagle 3000 Lo-Temperature
100°F (38°C) Cycle With Disposer

3-12/3-13
764323-253

EAGLE 3000 CHARTING CYCLE HI - TEMPERATURE 130°F (54°C) CYCLE WITH DISPOSER
(PREPROGRAMMED - CANNOT BE MODIFIED)

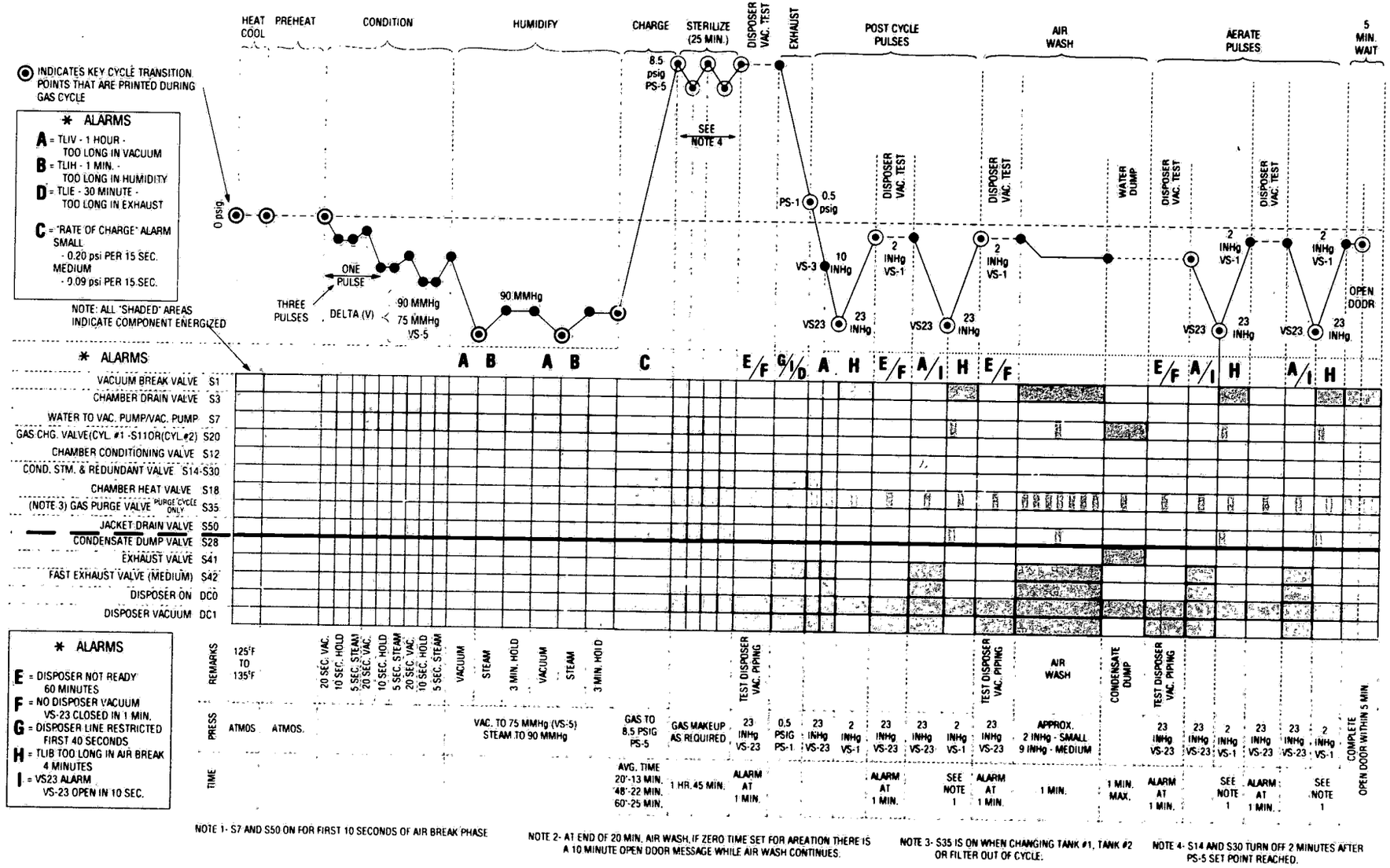

NOTE 1- S7 AND S50 ON FOR FIRST 10 SECONDS OF AIR BREAK PHASE

NOTE 2- AT END OF 20 MIN. AIR WASH, IF ZERO TIME SET FOR AREATION THERE IS A 10 MINUTE OPEN DOOR MESSAGE WHILE AIR WASH CONTINUES.

NOTE 3- S35 IS ON WHEN CHANGING TANK #1, TANK #2 OR FILTER OUT OF CYCLE.

NOTE 4- S14 AND S30 TURN OFF 2 MINUTES AFTER PS-5 SET POINT REACHED.

3-14/3-15
764323-253

Figure 3-2. Cycle Graph — (Part 3 of 3)
Eagle 3000 Charting Cycle Hi-Temperature 130°F (54°C) Cycle With Disposer (Preprogrammed — Cannot Be Modified)

EAGLE 2000 HI - TEMPERATURE 130°F (54°C) CYCLE WITH DISPOSER

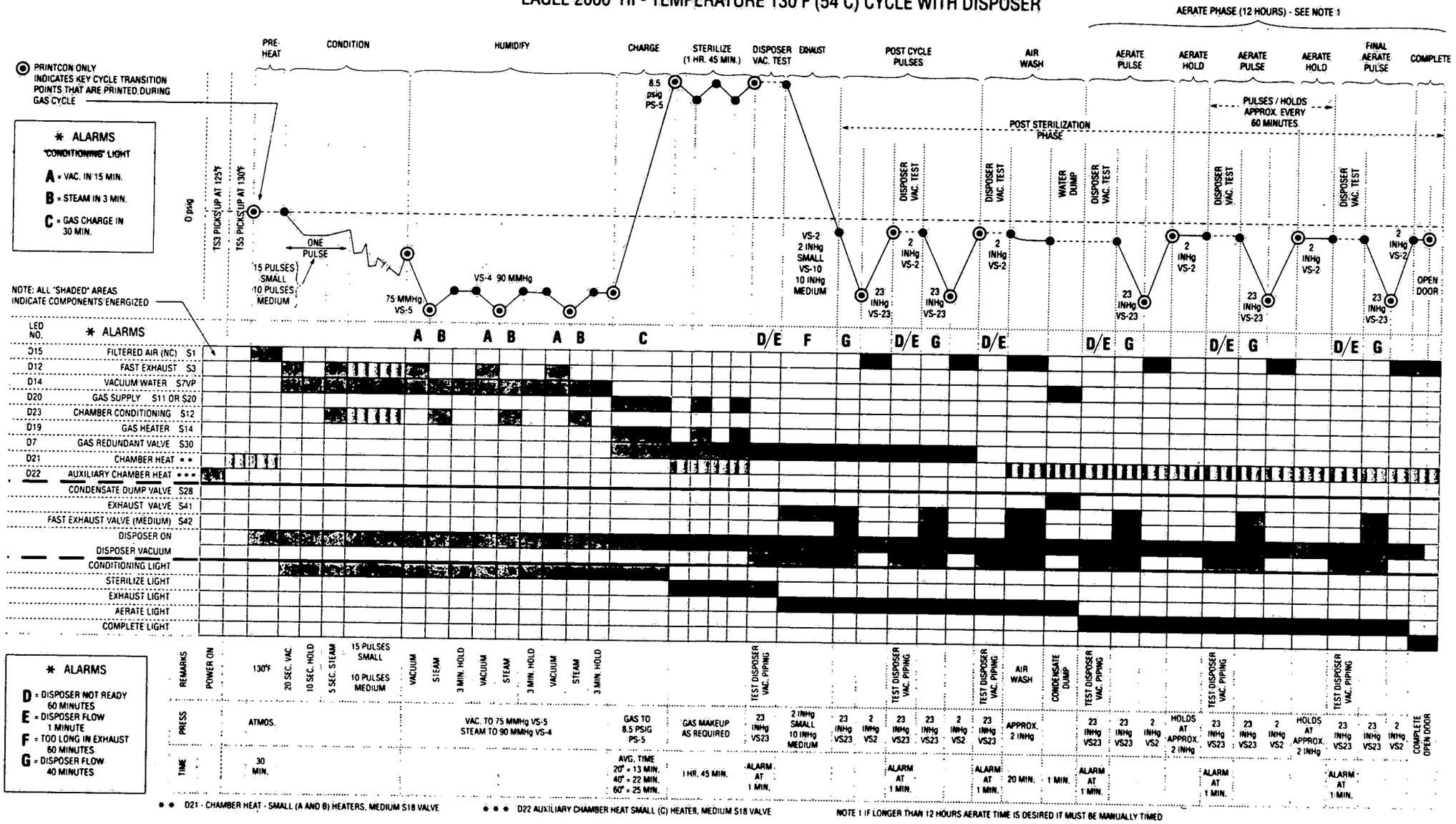

Figure 3-3. Cycle Graph — (Part 1 of 2)
Eagle 2000 Hi-Temperature
130°F (54°C) Cycle With Disposer

3-16/3-17
764323-253

EAGLE 2000 LO - TEMPERATURE 100°F (38°C) CYCLE WITH DISPOSER

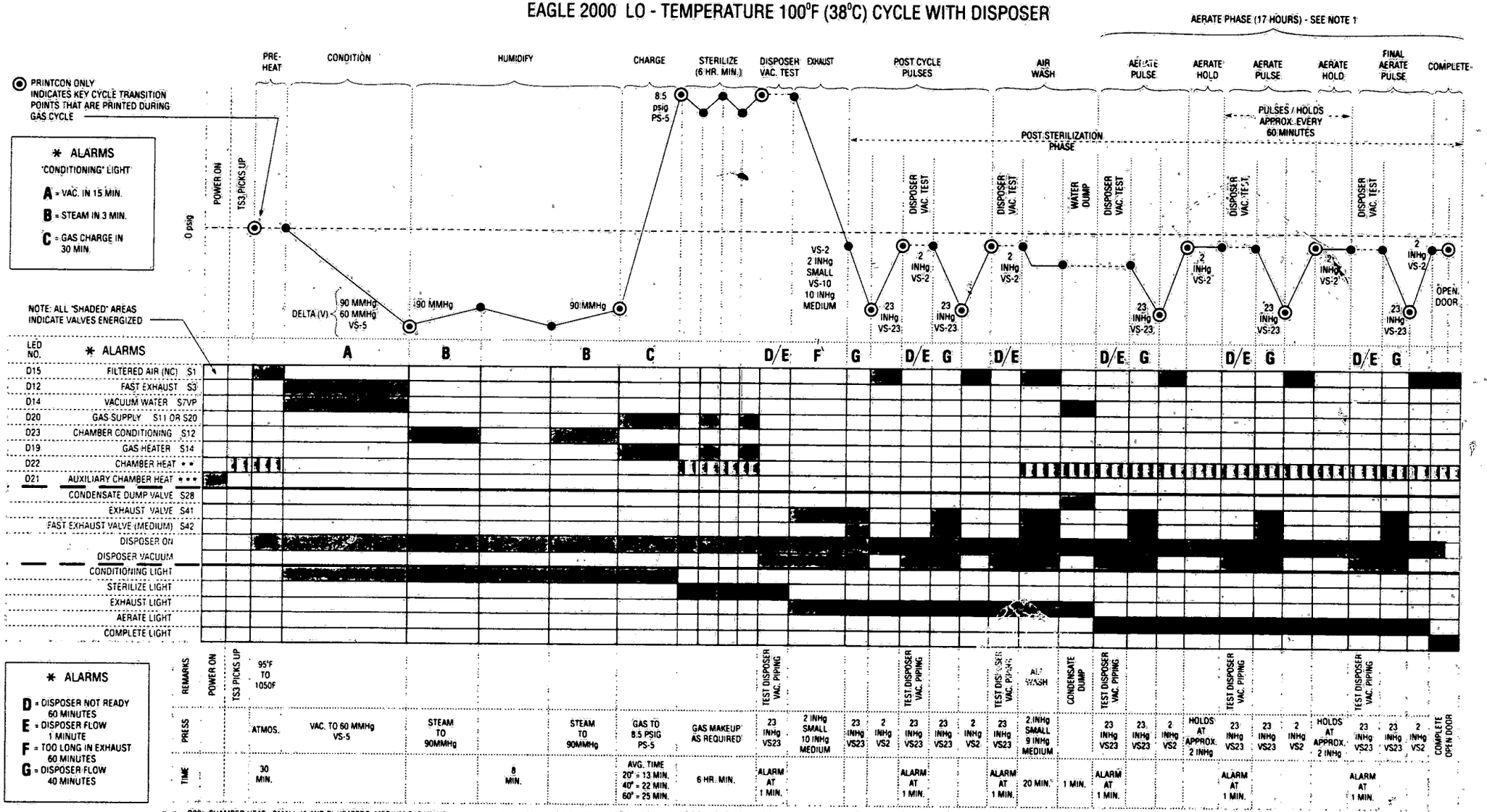

Figure 3-3. Cycle Graph — (Part 2 of 2)
Eagle 2000 Lo-Temperature
100°F (38°C) Cycle With Disposer

3-18/3-19
764323-253

MEDALLION GAS HI - TEMPERATURE 130°F (54°C) WITH DISPOSER

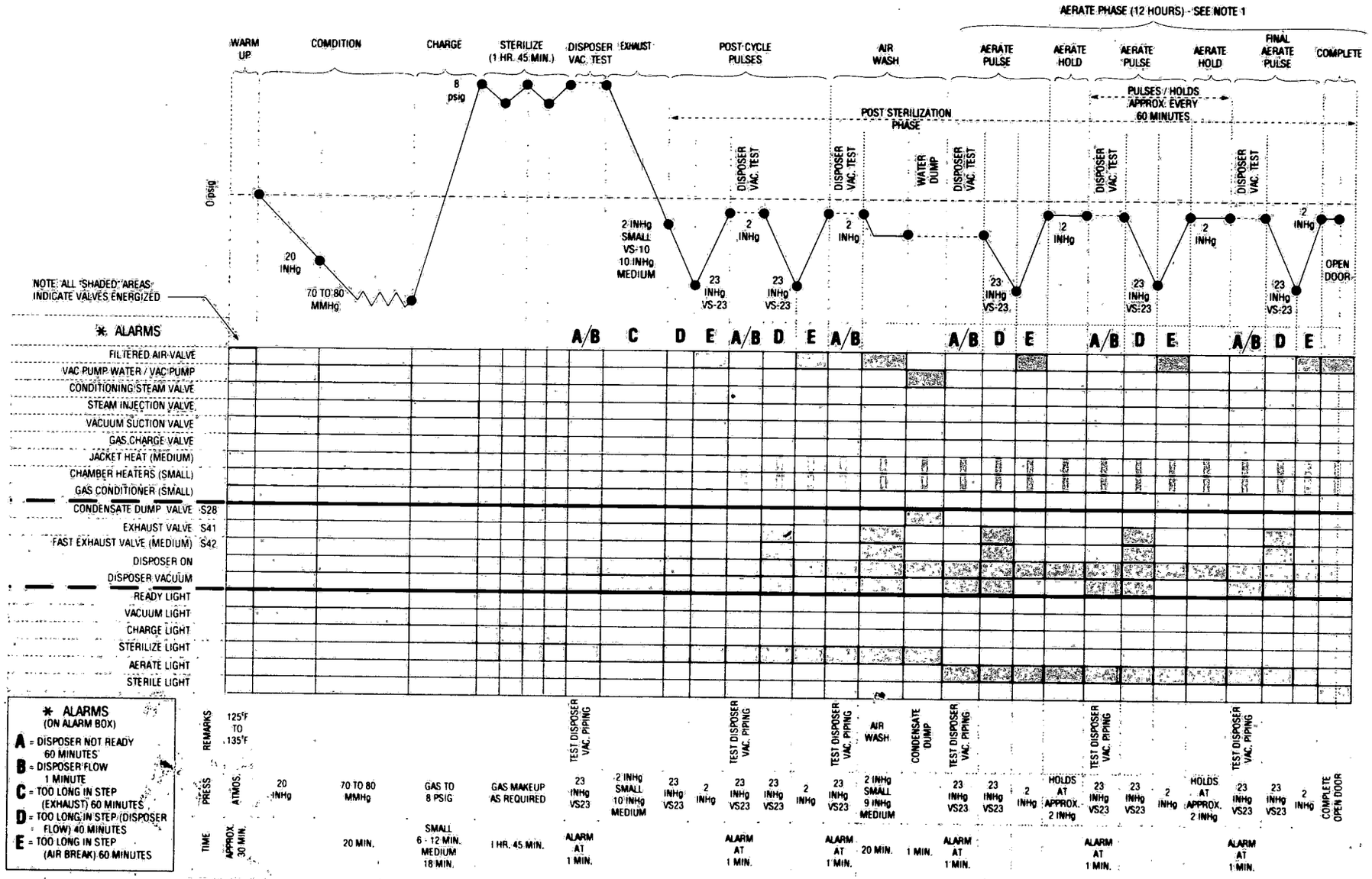

NOTE 1 IF LONGER THAN 12 HOURS, AERATE TIME IS DESIRED IT MUST BE MANUALLY TIMED

Figure 3-4. Cycle Graph — (Part 1 of 2) Medallion Gas Hi-Temperature 130°F (54°C) Cycle With Disposer

3-20/3-21
764323-253

MEDALLION GAS HI - TEMPERATURE (SHORT CYCLE) 130°F (54°C) WITH DISPOSER

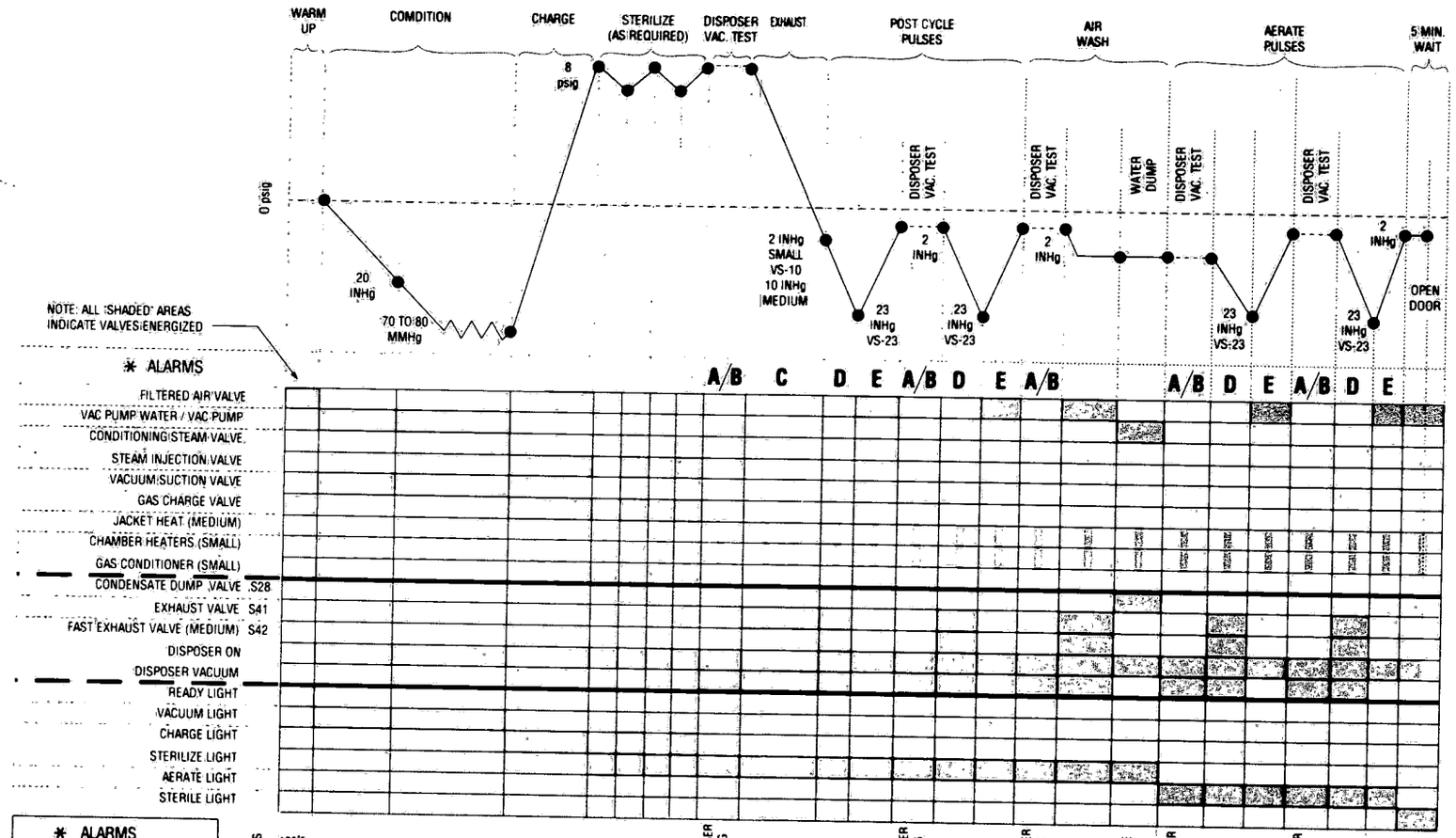

NOTE 1 IF LONGER THAN 12 HOURS AERATE TIME IS DESIRED IT MUST BE MANUALLY TIMED

Figure 3-4. Cycle Graph — (Part 2 of 2)
Medallion Gas Hi-Temperature
(Short Cycle) 130°F (54°C) Cycle With Disposer

3-22/3-23
764323-253

THIS PAGE
INTENTIONALLY LEFT
BLANK

4.1 GENERAL INSPECTION AND MAINTENANCE

The following procedures are recommended on a routine basis by the customer. A preventive maintenance guide follows this section and should be performed by a qualified service technician for optimum operation.

1. Routine inspection
   a. Inspect Disposer door gasket seal for tears
   b. Inspect Disposer air inlet for debris
   c. Verify Disposer indicating lights are functioning properly
2. Quarterly
   a. Inspect Disposer air inlet filter; replace if required. Removal of the filter is necessary for inspection as dirt collects on the inside. (Note: Disposer installations in locations where dust or dirt is a problem may require more frequent inspections and replacements of the filter.)

4.2 RECOMMENDED PREVENTIVE MAINTENANCE - AMSCO EO DISPOSER SYSTEM

Table 4-2. Preventive Maintenance Guide

	1	2	3	4	5	6
1.0 PREPARATION FOR PREVENTIVE MAINTENANCE						
1.1 Discuss operation with department personnel	x	x	x	x	x	x
1.2 Review sterilizer printouts/charts for any problems	x	x	x	x	x	x
2.0 MECHANICAL COMPONENTS						
2.1 Air filter—inspect for debris, replace each 6 months minimum		x		x		x
2.2 Air flow switch PS-1, PS-2—confirm setting					x	
2.3 Gas inlet solenoid valve FSV-1, rebuild					x	
2.4 Leak check piping between sterilizer and Disposer	x					
2.5 Vacuum pump, rebuild				A/R		
3.0 ELECTRICAL COMPONENTS						
3.1 Control relays—remove and visually inspect, replace as required		x		x		x
3.2 Fuses—inspect for signs of overheating, replace as required	x	x	x	x	x	x
3.3 Heaters—measure voltage and current		x		x		x
3.4 Vacuum Pump—measure voltage and current		x		x		x
3.5 Verify Control and Overtemp T-stat settings	x					
4.0 FUNCTIONAL						
4.1 *Perform EO analysis of stack output					A/R	
4.2 Verify Analogic Controller set points			x			
4.3 Confirm operation of Disposer indicating lights	x	x	x	x	x	x
5.0 STERILIZER COMPONENTS						
5.1 Exhaust line solenoid—rebuild					x	
5.2 Exhaust line strainer—inspect and clean			x			x
5.3 Interconnect/Sequencer box—inspect for loose wires	x	x	x	x	x	x
5.4 Confirm proper operation of indicator lights	x	x	x	x	x	x

*Check with local air quality management department for frequency required for stack testing.
A/R = As required.

Section 5: Troubleshooting

5.1 TROUBLESHOOTING CHART

Operational faults on units with an EO Disposer will not appear until the sterilizer enters the Exhaust phase. Faults that are present during Condition, Charge, and Sterilize portions of an EO sterilizer cycle do not occur with the EO Disposer, or related Disposer components.

Table 5-1. Troubleshooting Chart

Status	Trouble	Cause/Correction
1 .Fault — Disposer Not Ready condition	Eagle 3000 units — prints out "ALARM: DISPOSER NOT READY" Eagle 2000 Printcon — prints out "ALARM: DISPOSER NRDY" Eagle 2000 IRC — displays "NOT READY" on the remote alarm box Medallion units — displays "DISPOSER NOT READY" on the remote alarm box	Situation — The sterilizer control requires the Disposer to achieve Ready status within 60 minutes of starting the Exhaust phase. If the Disposer does not receive the signal, the alarm occurs. Causes: 1. Disposer power switch OFF — this is indicated by the "POWER" LED on the sterilizer interface box being off 2. Insufficient air flow through the Disposer — this is indicated by the "LOW AIR FLOW" LED on the sterilizer interface box being lit. Causes of low air flow can be any of the following: a. plugged air filter in Disposer b. faulty fan in Disposer c. faulty air pressure switch PS-1 or PS-2 in Disposer d. excess back pressure in Disposer exhaust duct 3. Disposer has not reached minimum operating temperature (280° F). Causes of problem can be: a. ambient air temperature too low — minimum air temp allowable is 50°F b. faulty incoming 3-phase power c. faulty heaters in Disposer d. faulty temperature controller or relays in Disposer e. fault in communication lines between Disposer and sterilizer 4. Disposer has exceeded maximum operating temperature (450° F). Causes of problem can be: a. faulty catalytic bed b. faulty heater controller or relays in Disposer c. faulty exhaust S41 or S42 valve in sterilizer
2. Fault — Insufficient vacuum level in exhaust line during exhaust pipe vacuum check	Eagle 3000 units — prints "ALARM: NO DISPOSER VACUUM" Eagle 2000 Printcon — prints "ALARM: DISPOSER FLOW" Eagle 2000 IRC — displays "NO AIR FLOW" on the remote alarm box. Medallion units — displays "NO DISPOSER AIR FLOW" on the remote alarm box	Situation — The sterilizer control requires that a minimum vacuum level is reached (VS-23 setting) during the exhaust pipe vacuum check within 60 seconds of starting the vacuum check. The sterilizer control continues to try to achieve the VS-23 vacuum setting even if the alarm has occurred. This alarm automatically silences if reaching the VS-23 setting. This alarm also occurs on Medallion sterilizers if one of the two additional conditions do not occur: a. The VS-23 switch must open back up within 10 seconds of the completion of the pipe check b. The 2-inch vac alarm switch must be open at the time VS-23 is actuated *Note for Medallion controls only, if either of the above conditions occur, the alarm buzzer will not self clear and continues buzzing until silenced by the operator.* Causes: 1. Leak in exhaust pipe between sterilizer and Disposer 2. Incorrect VS-23 setting — valve in exhaust pipe closed 3. Faulty VS-23 switch 4. Faulty vacuum pump in Disposer 5. Faulty FSV-1 solenoid valve in Disposer 6 Faulty 2" vac alarm switch (Medallion units only)

Table 5-1. Troubleshooting Chart (continued)

Status	Trouble	Cause/Correction
3. Fault — Initial sterilizer exhaust is too slow (applies to Eagle 3000 sterilizers only)	3000 control prints "ALARM: DISPOSER LINE RESTRICTED"	Situation — The 3000 control monitors the pressure drop during the first 40 seconds of exhaust. The pressure must drop a minimum of 10 mm Hg or the alarm will occur. Causes: 1. Faulty S41 exhaust line solenoid valve 2. control requires calibration
4. Fault — Sterilizer takes too long to exhaust to approx. atmospheric pressure.	Eagle 3000 units — prints "TOO LONG IN EXHAUST" Eagle 2000 Printcon — prints "ALARM: DISP. EXHST" Eagle 2000 IRC — displays "TOO LONG IN EXHAUST" on the remote alarm box Medallion units — displays "TOO LONG IN STEP" on the remote alarm box	Situation — The sterilizer control allows a maximum amount of time to go from exposure pressure to a set vacuum level. Causes: 1. Faulty sterilizer S41 valve 2. Faulty check valve on drain line of sterilizer's original plumbing 3. Sterilizer exhaust orifice plugged 4. Sterilizer exhaust strainer plugged 5. Sterilizer has lost the Disposer Ready signal
5. Fault — Sterilizer takes too long to exhaust to a deep vacuum setting (VS-23) during post vacuum exhaust pulses or aeration pulses	Eagle 3000 units — prints "TOO LONG IN EVACUATION" Eagle 2000 Printcon — prints "ALARM: DISPOSER FLOW" Eagle 2000 IRC — displays "NO AIR FLOW" on the remote alarm box Medallion units — displays "TOO LONG IN STEP" on the remote alarm box	Situation — The sterilizer control allows a maximum time for the sterilizer to reach the VS-23 setting of 23" Hg. Causes: 1. Leak in exhaust pipe between sterilizer and Disposer 2. Incorrect VS-23 setting 3. Faulty VS-23 switch 4. Faulty vacuum pump in Disposer 5. Faulty S41 (or S42 on 24x36 units) exhaust valve 6. Faulty drain line check valve on original sterilizer plumbing 7. Water is present in exhaust line (source of water usually due to faulty sterilizer drain line check valve or vacuum pump water inlet solenoid valve).

Table 5-1. Troubleshooting Chart (continued)		
Status	**Trouble**	**Cause/Correction**
6. Fault — Sterilizer takes too long to air break.	Eagle 3000 — printer prints "TOO LONG IN AIR BREAK" Eagle 2000 — no indication, printed or audible Medallion — displays "TOO LONG IN STEP" on remote alarm box	Situation — Eagle 3000 units allow 4 minutes to reach 2 in Hg., Medallion units allow 60 minutes to reach 2 in Hg. Eagle 2000 units do not have a "TOO LONG IN AIR BREAK" alarm. Causes: 1. Faulty filtered air valve 2. Plugged sterilizer filter on the filtered air valve inlet
7. Fault — Disposer does not reach minimum working temperature during exhaust	Eagle 3000 — printer prints "ALARM: CHECK DISPOSER CATALYST" and "CATALYST" LED is lit on interface box Eagle 2000 Printcon — printer prints "ALARM: CHECK CATALYST" and "CATALYST" LED is lit on interface box Medallion — displays "CHECK CATALYTIC BED" on remote alarm box and "CATALYST" LED is lit on interface box	Situation — Disposer must reach a minimum of 320°F during sterilizer exhaust phase. Causes: 1. Air or Refrigerant 12 is being run through sterilizer Temperature rise relies on catalytic reaction with EO for temperature rise 2. Faulty catalyst
8. Fault — Disposer has insufficient air flow	Indication — "LOW AIR FLOW" LED is lit on sterilizer interface box	Situation — Pressure switches inside Disposer indicate insufficient air flow through the Disposer. Causes: 1. Air filter inside Disposer is plugged 2. Disposer fan not operating 3. Back pressure in exhaust duct 4. Pressure switches in Disposer require adjustment

Table 5-1. Troubleshooting Chart (continued)		
Status	**Trouble**	**Cause/Correction**
9. Fault — Disposer has exceeded maximum operating temperature (500°F)	"OVERTEMP" LED is lit on sterilizer interface box and "OVERTEMP" light is lit inside Disposer	Situation — Disposer goes to an overtemp condition when temperature exceeds 500° F. A latch relay in the Disposer maintains the alarm condition until manual reset button is pressed. Causes: 1. VS-10 vacuum switch incorrectly set (applies to 24x36 IRC units only) 2. Faulty S42 sterilizer exhaust valve (applies to 24x36 units only) 3. Faulty catalyst bed 4. Sterilizer charged to higher than 8.5 psig 5. Coils on S41 and S42 valves are reversed (applies to 24 x 36 units only)

THIS PAGE
INTENTIONALLY LEFT
BLANK

6.1 ADJUSTMENT PROCEDURES

Tools required for this section are:

1. Digital potentiometer set for type "J" thermocouple
2. Calibrated compound gauge
3. Differential pressure gauge (P-764323-802) and gauge bit (P-764323-803) capable of reading 0 to 4 inches of water pressure
4. 50cc syringe (without needle)

6.1.1 Sterilizer Components

1. VS-23 vacuum switch—Install compound gauge in plugged tee adjacent to the vacuum switch. When sterilizer is exhausting to the disposer, monitor the vacuum level in the piping. Adjust switch at 23 in Hg.
2. VS-10 vacuum switch (24x36 IRC units only)—Install compound gauge in plugged tee adjacent to the vacuum switch. When sterilizer is exhausting to the disposer, monitor the vacuum level in the piping. Adjust switch at 10 in Hg.

6.1.2 Disposer Components

1. Heater Control Thermostat—Observe temperature on analogic controller. With unit stabilized at operating temperature (290° F [143° C]), compare the temperature on the thermostat dial with the digital readout. Adjust thermostat dial if they do not match.
2. Heater Overtemp Thermostat—Temporarily set the control thermostat to operate at 400° F (204° C) and the overtemp thermostat at 375° F (190° C). When temperature reaches the overtemperature thermostat setting of 375° F (190° C), the heaters should turn off. Verify the dial setting of the thermostat and adjust if necessary. At the completion of this adjustment reset the control thermostat to 290° F (143° C) and the overtemp thermostat to 550° F (270° C).
3. Pressure Switches—Disposer has two pressure switches, PS1 and PS2. PS1 is to be set at 1.5 inches water, and PS2 is to be set at 1.8 inches water.

   In the following procedures the syringe is used to pressurize the switch. The set point of the switch can be set by monitoring the pressure gauge and the Disposer control.

   a. PS1 measures the differential pressure across the catalyst bed. In the event of a plugged catalytic bed this switch will activate. Disconnect the 1/4 inch tube at the 90° fitting located at the top side of the heater box (See Figure 6-1). With the tube disconnected, the switch will deactivate and the Low Air Flow light in the Disposer will come on. Slide the hose onto the 1/4 inch tube. Connect the gauge, tee, and syringe. Slowly inject air into the line and watch the pressure gauge. The switch should activate at 1.5 inches. When the switch activates, the Low Air Flow light in the Disposer will turn off. Reconnect the 1/4 inch tube when completed.

   b. PS2 measures the differential between the outside of the cabinet and the inside. In the event of a plugged air filter, this switch will activate. This checks for operation of the filter element. Connect the hose to the elbow fitting at the back of the Disposer. Pressurize the line until the switch activates. The switch should activate at 1.8 inches. When the switch activates, the Low Air Flow light in the Disposer will come on.

6.2 COMPONENT REPLACEMENT PROCEDURES

6.2.1 Prefilter (Figure 6-2)

The prefilter should be changed at least every six months. Replace filter as follows:

1. Be sure main disconnect switch is OFF.
2. Loosen door clamps and open door.
3. Remove clamp and prefilter.
4. Install new filter P/N 764323-032.
5. Replace clamp and tighten.
6. Close door and tighten door clamps.

6.2.2 Catalytic Cell (Figure 6-3)

The catalytic cell must be replaced when it is no longer effective for the removal of EO, as determined by EO stack analysis. Replace as follows:

1. Be sure main disconnect switch is OFF.
2. Loosen door clamps and open door.

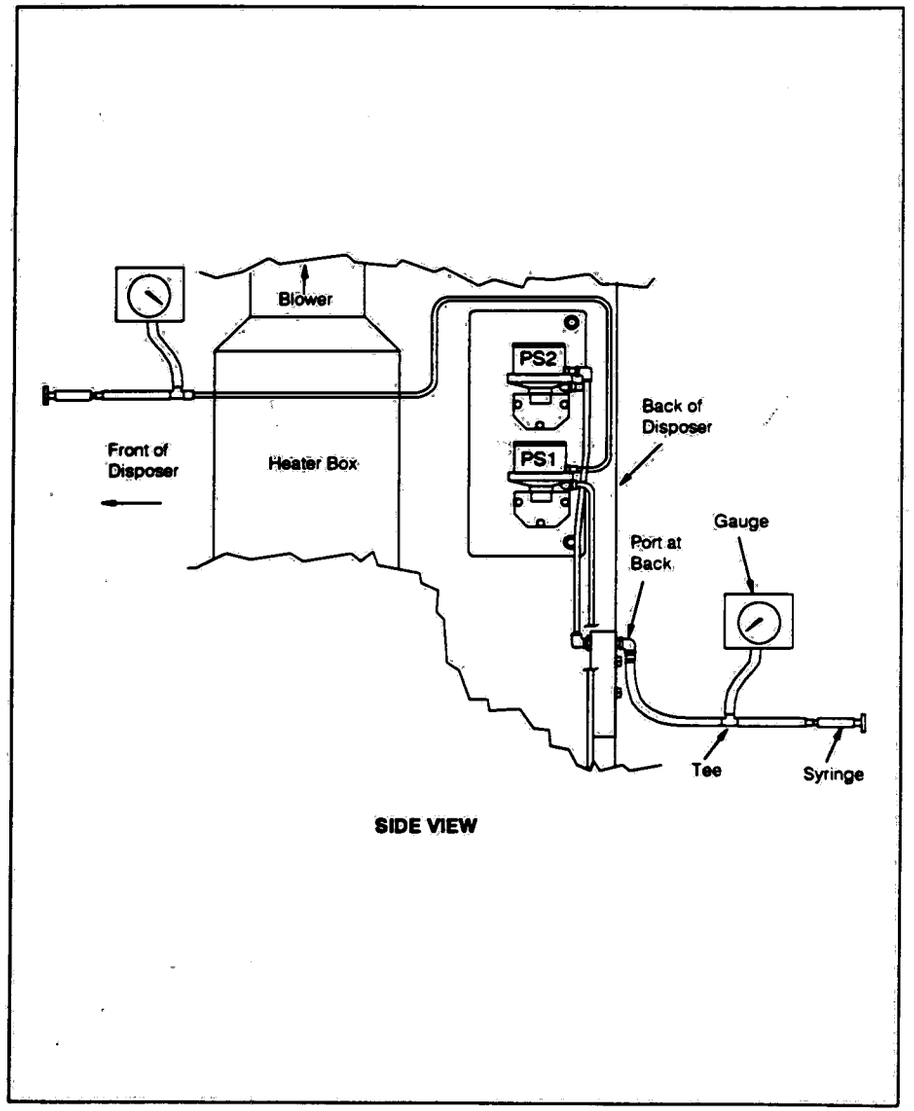

Figure 6-1. Disposer Pressure Switch Adjustment

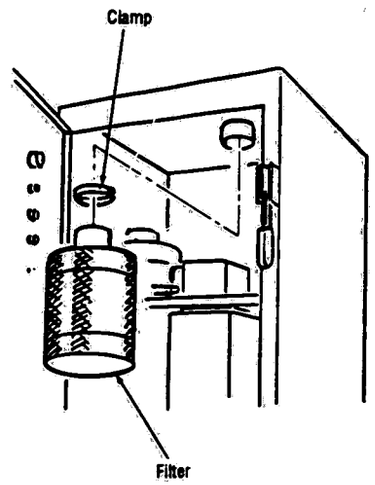

Figure 6-2. Prefilter Replacement

3. Loosen clamps on hose (between heater and catalytic cell transition plenum) and slide clamps and hose down.
4. Disconnect EO feed to plenum at union.
5. Check that no EO vapor is present in the duct using standard site practices.
6. Remove 3/8" bolts from perimeter of transition plenum and remove plenum.
7. Remove four 3/8" hex nuts and two clamping bars holding catalytic cell in place and remove catalytic cell.

NOTE: Catalytic cell weighs approximately 80 lbs. It is recommended that two people lift and remove cell or use other appropriate lifting methods.

8. Inspect interior for dirt or debris and remove.
9. Inspect new catalytic cell P764323-196. Inspect gasket for damage; repair and/or replace if necessary.
10. Install new catalytic cell. Be sure cell is seated squarely in lower housing. Install four 3/8" hex nuts and two clamping bars for catalytic cell holddown.
11. Install new gasket, if needed, around perimeter of transition plenum. Gasket and adhesive suitable for high temperature must be used.
12. Continue installation in reverse order of disassembly. Tighten all bolts and nuts evenly.

NOTE: Be sure all connections are tight and leak free.

6.2.3 Power Switch Cable Adjustment (Figure 6-4)

1. Confirm that supplying power to the device has been turned off.
2. Move circuit breaker handle to ON position.
3. Place end of cable through hole in tab of the sliding plate on circuit breaker operator.
4. Move operating handle to its maximum ON position and replace the cable mounting threads into the slot on the fixed tab plate. Adjust the mounting nuts so that the nut on the cable rod end touches the sliding plate tab.
5. Hold operating handle in ON position and place spring over rod. Attach spring adjuster and tighten it until it touches the spring. DO NOT OVERTIGHTEN THE SPRING ADJUSTMENT NUT.
6. Check that the circuit breaker turns OFF and ON by moving the operating handle. If the breaker does not turn ON, loosen the cable mounting nuts at the fixed plate tab and move the cable forward until the breaker turns ON. Retighten mounting nuts.
7. Trip the circuit breaker by pushing the "trip" button.
8. Check that the breaker resets by moving the operating handle from ON to OFF and back to ON. If the breaker resets, tighten the spring adjuster one additional turn. Attach lockwasher and #10-32 nut to cable rod end and tighten to 32 in-lbs.
9. If the circuit breaker does not reset, tighten the spring adjuster one turn and repeat steps 2 and 3. Continue this until breaker resets, then tighten the adjuster one additional turn and secure with lockwasher and nut.

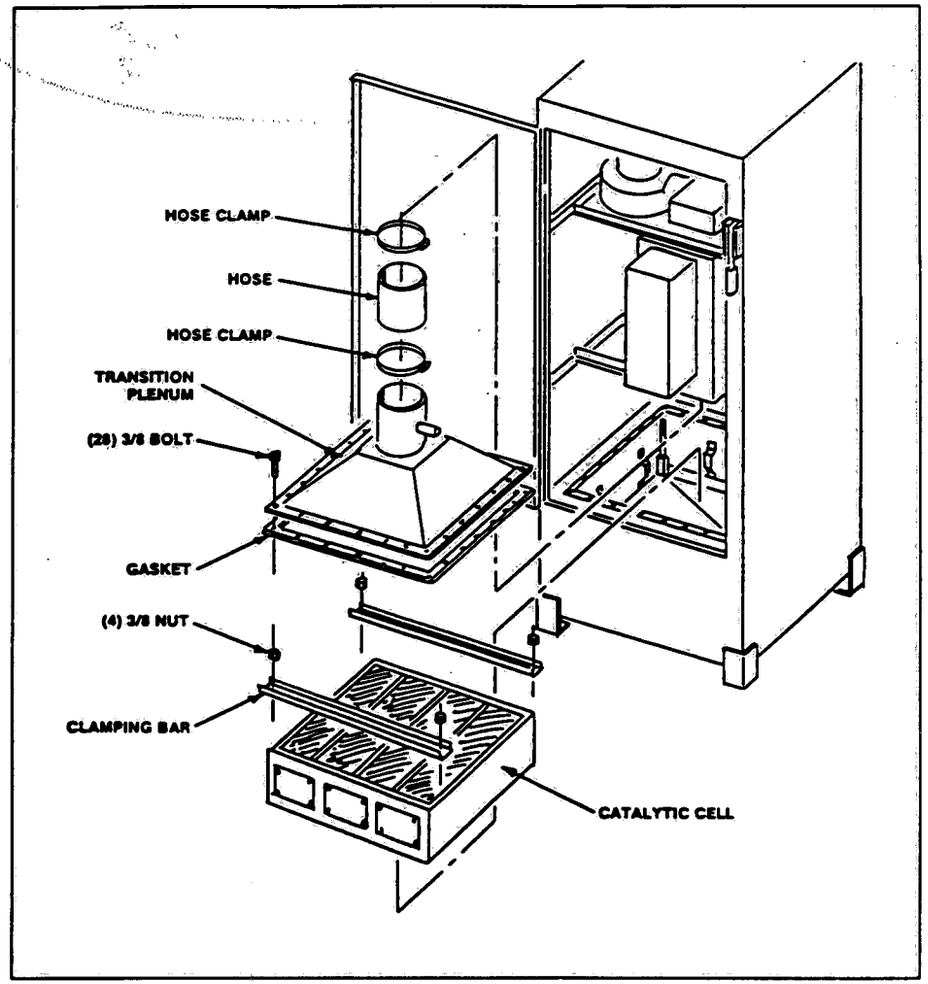

Figure 6-3. Catalytic Cell

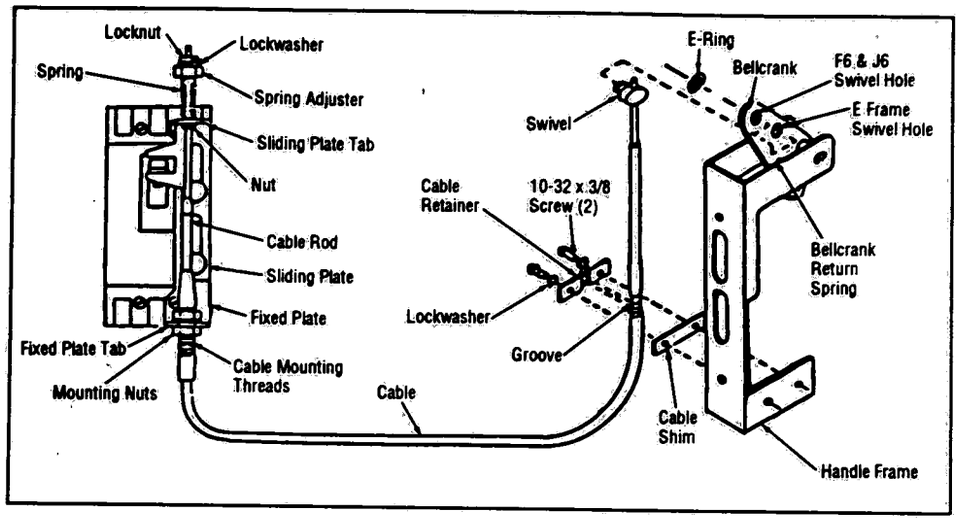

Figure 6-4. Cable Adjustment

6.3 DISPOSER BLOWER AIR FLOW ADJUSTMENT

Tools required for this section are:

1. Air flow meter (thermo-anemometer model 8565 used in AMSCO EO analysis or equivalent) capable of measuring between 1000 and 2000 ft/min.

Blower adjustment

1. Blower output — The air flow through the Disposer is factory set at 120 ± 10 cfm. After installation the setting has to be confirmed and adjusted as necessary to compensate for any restriction that may be present in the exhaust duct. To adjust properly the final configuration exhaust duct must be installed. Adjust as follows:
   a. Remove air inlet cover on Disposer. If aerators are connected to air inlet, these must be disconnected also.
   b. Close cabinet door and close tightly with latches on door.
   c. Using air flow meter, measure air flow at Disposer inlet. Take four measurements approximately 1 inch in from edge (see Figure 6-6). See Table 6-1 for air flow rate to cfm conversion.
   d. If air flow is 120 ± 10 cfm, unit is within spec. and no adjustment is necessary. If not, alter the air flow rate by adjusting the baffle plate located just below the blower outlet. It will be necessary to remove the 4 bolts located around the blower outlet perimeter. Slide the baffle in or out (it is notched to allow a step adjustment). Tighten bolts and retest.

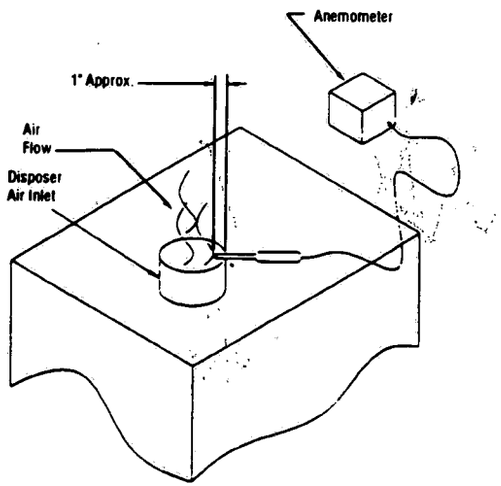

Figure 6-6. Blower Adjustment

Table 6-1. Air Flow Conversion Chart

Ft/Min	CFM
1333	110
1345	111
1357	112
1369	113
1381	114
1393	115
1406	116
1418	117
1430	118
1442	119
1454	120
1466	121
1478	122
1490	123
1503	124
1515	125
1527	126
1539	127
1551	128
1563	129
1575	130

SERVICE BULLETIN

Product: EO DISPOSER

Bulletin No.: 92020-I

Section: STERILIZERS

Supplement No.: ST-201

Approved:

Date: 9/1/92

Subject: WATER TRAP KIT FOR EXHAUST LINE

SITUATION: EO Disposer kits are now being shipped with a water trap that is installed in the exhaust line. Kits as shipped previously did not have the water trap.

DESCRIPTIVE CAUSE: The Disposer vacuum pump is susceptible to damage if water is present in the exhaust line. Water can enter the exhaust line from a fault in the sterilizer or fault in the steam supply. The water trap will collect the water and prevent it from flowing to the Disposer.

CORRECTIVE ACTION: Order kit P755716-132 for each sterilizer connected to an EO Disposer. The kit consists of the water trap, miscellaneous pipe fittings, and a shut-off valve. Parts that need to be obtained in the field are adaptor fittings to connect the water trap's 3/4" NPT female inlet and outlet to the exhaust line. In addition, a 3/4" brass tee and a 3/4" x 1/4" bushing may be needed on some earlier Disposer installations to allow the water trap drain line to be adapted to the sterilizer drain piping.

The water trap self drains small amounts of water into the sterilizer drain piping, during the water purge phase of the cycle. If it should fill up and prevent a vacuum from being pulled in the sterilizer, then a fault exists which must be corrected. Check the following:

1. faulty sterilizer drain line check valve
2. faulty sterilizer vacuum pump water inlet solenoid valve
3. improper sterilizer steam conditioning setting
4. poor quality steam/inadequate steam trapping on steam line
5. improperly leveled sterilizer

Ref: Field Service Engineering/J. Billey

AMSCO

THIS CLASSIFIED INFORMATION FOR USE BY AMSCO PERSONNEL ONLY AND IS THE LATEST AVAILABLE AT DATE OF ISSUE. AMSCO ENGINEERING DIVISION RESERVES THE RIGHT TO CHANGE THIS DATA WITHOUT INCURRING OBLIGATIONS OTHER THAN ROUTINE DISTRIBUTION OF REVISED SERVICE BULLETIN.
COPYRIGHT 1990 BY AMERICAN STERILIZER COMPANY, ERIE, PENNSYLVANIA, U.S.A.

Printed in U.S.A.

2. If the vacuum switch is present, then the program revision must be revision 11 or later. If the sterilizer has an earlier revision chip, order new EPROM P-93910-634. EPROMS in stock will be Revision 12 or newer and will be compatible with the VS23 switch.
3. If the interconnect kit does not have a VS23 switch, and the program is Revision 10 or earlier, then the kit can be installed as is.
4. If the interconnect kit does not have a VS23 switch, and the program is Revision 11 or later, there are two options:
   a. Obtain a Revision 10 EPROM though Field Engineering
   b. Install VS23 switch in the piping. This is the preferred option in that the later revision program chips have enhancements that are beneficial to both the customer and for servicing. Order P-755716-164. This kit includes the VS23 vacuum switch, wiring cable, and miscellaneous hardware needed to install the switch.

Existing Installations:

To allow installation of Revision 11 or newer software in an Eagle 3000 EO sterilizer that does not have VS23 in the piping, order:

a. EPROM P-93910-634
b. Kit P-755716-164. This kit includes the VS23 vacuum switch, wiring cable and miscellaneous hardware needed to install the switch.

SERVICE BULLETIN

Product: EAGLE 3000 EO GAS STERILIZERS WITH DISPOSER **Bulletin No.:** 92021-I

Section: STERILIZERS **Supplement No.:** ST-202

Approved: **Date:** 9/1/92

Subject: COMPATIBILITY OF PROGRAM REVISION WITH DISPOSER KIT

SITUATION

A design change has been made on the interconnect kit that allows the Eagle 3000 EO sterilizer to be connected to the EO Disposer. This design change also involves a change in the revision level of the program in the sterilizer control.

DESCRIPTIVE CAUSE:

The design interconnect kit as originally designed used the charge line transducer to measure vacuum levels when the Disposer vacuum pump was pulling vacuum. The current design released in the 2nd quarter of 1992 uses a standard vacuum switch, labeled VS23, to perform this function. The VS23 vacuum switch, if present, is located in the exhaust piping adjacent to the S28 water dump valve.

In order for the control to function properly with the new vacuum switch, a program change was made beginning with Revision 11. Therefore, on Disposer kits that have a VS23 vacuum switch in the interconnect piping, Revision 11 or later program chips are required.

On units that do not have VS23 vacuum switch, programs Revision 10 and earlier can only be used. Therefore existing Eagle 3000 EO sterilizers with Disposer cannot update to Revision 11 or later EPROMS unless the modification described below is installed.

CORRECTIVE ACTION:

New Installations:

1. When installing a Disposer kit on a 3000 EO sterilizer verify if the interconnect kit (P-146655-710 for 20x20 units, P-146655-711 for 24x36 units) has a VS23 vacuum switch (P-83866-001). Then check the program revision level on the EPROM on the control board.

continued . . .

Ref: Field Service Engineering/J. Billey

AMSCO

THIS CLASSIFIED INFORMATION FOR USE BY AMSCO PERSONNEL ONLY AND IS THE LATEST AVAILABLE AT DATE OF ISSUE. AMSCO ENGINEERING DIVISION RESERVES THE RIGHT TO CHANGE THIS DATA WITHOUT INCURRING OBLIGATIONS OTHER THAN ROUTINE DISTRIBUTION OF REVISED SERVICE BULLETIN.
COPYRIGHT 1990 BY AMERICAN STERILIZER COMPANY, ERIE, PENNSYLVANIA, U.S.A.

Printed in U.S.A.

4-10-7 (9/89)

SERVICE BULLETIN

Product: EO DISPOSER

Bulletin No.: 92017-I

Section: STERILIZERS

Supplement No.: ST-200

Approved:

Date: 6/15/92

Subject: ENVIRONMENTAL VALIDATION TESTING

SITUATION: EO analysis of the Disposer exhaust indicates less than advertised efficiency (99.9% destruction of EO). This EO testing is not available from AMSCO at this time, but qualified local contractors can perform this service.

CORRECTIVE ACTION: AMSCO has a contractual agreement with the manufacturer of the EO Disposer, Donaldson, Inc. This agreement requires that Donaldson must be consulted, should the EO Disposer not pass the initial EO test.

In the event the Disposer does not pass EO testing, contact both AMSCO Field Engineering in Erie, and Donaldson, Inc. The contact at Donaldson is the Manager of Engineering, High Purity Products (612/887-3417). As of this writing, the manager is Tim Walsh.

Do not replace any component on the EO Disposer until after making the contact with Field Engineering and Donaldson.

Ref: Field Service Engineering/J. Bliley (x2962)

AMSCO

THIS CLASSIFIED INFORMATION FOR USE BY AMSCO PERSONNEL ONLY AND IS THE LATEST AVAILABLE AT DATE OF ISSUE. AMSCO ENGINEERING DIVISION RESERVES THE RIGHT TO CHANGE THIS DATA WITHOUT INCURRING OBLIGATIONS OTHER THAN ROUTINE DISTRIBUTION OF REVISED SERVICE BULLETIN.
COPYRIGHT 1990 BY AMERICAN STERILIZER COMPANY, ERIE, PENNSYLVANIA, U.S.A

Printed in U.S.A.

4-10-7 (2/89)

SECTION 7: EXPLODED VIEWS AND PARTS LISTS

Assemblies and components of the Disposer are illustrated and identified on the following pages. The part number, the description and the quantity required for each usage is given.

HOW TO USE THE ILLUSTRATED PARTS BREAKDOWN:

1. Determine the function and application of the part required. Turn to the **List of Illustrations** and select the most appropriate title. Note the illustration page number.
2. Turn to the page indicated and locate the desired part on the illustration.
3. From the illustration, obtain the index number assigned to the part desired. Refer to the same index number in the PARTS LIST accompanying the illustration to find the AMSCO PART NUMBER and description of specific information regarding the part.

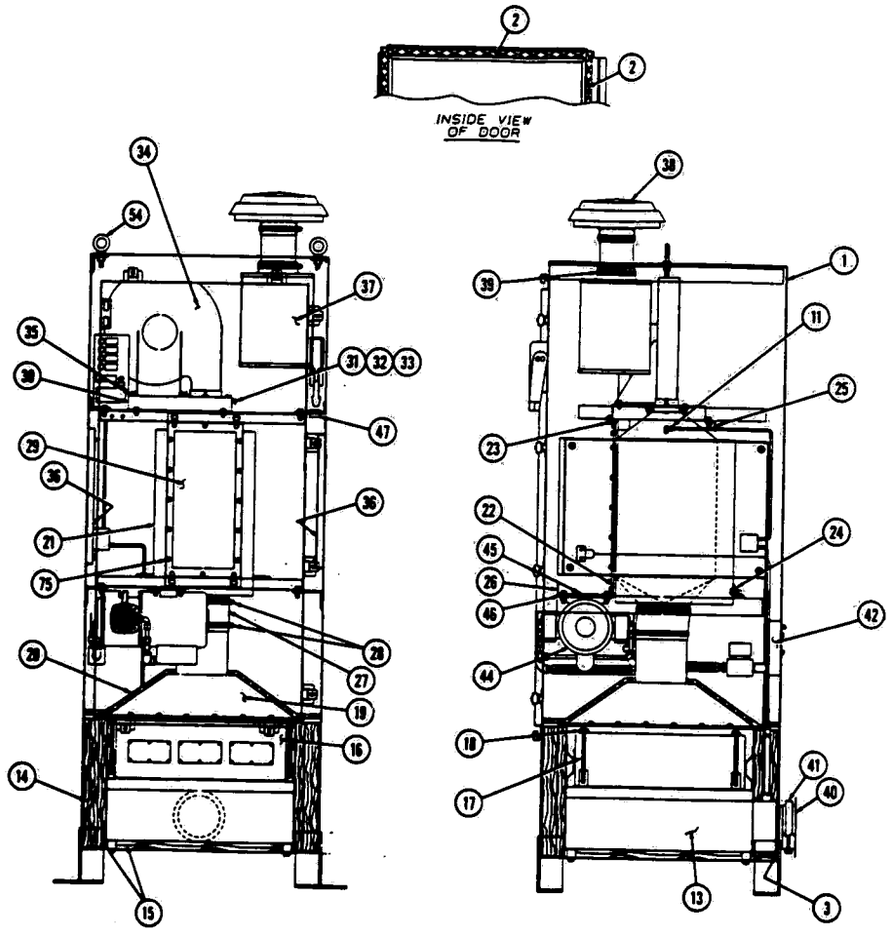

Figure 7-1. EO Disposer Assembly (Part 1 of 3)

FIG. & INDEX NO.	PART NUMBER			SVC	DESCRIPTION	UNITS PER ASSEMBLY
7-1-					ETO DISPOSER ASSEMBLY (Part 1 of 3)	X
1					HOUSING WELDMENT	1
2	P	764323	727		DOOR GASKET (12'-7" REQ'D.)	1
3					OUTLET GASKET	1
4					ADHESIVE, SILICONE RUBBER	A/R
5-12					See Part 3 of 3	
13					WELDMENT, LOWER UNIT	1
14					FIBREX, 2" THK.	A/R
15					FIBREX, 1" THK.	A/R
16	P	764323	196		FILTER ASSEMBLY (Catalyst Cell)	1
17					ROD, THREADED	4
18					BAR, CLAMP	2
19					DUCT, TRANSITION ASSEMBLY	1
20	P	764323	729		BLANKET, TRANSITION	1
21					HOUSING, HEATER	1
22					CROSS BRACE, LOWER FRONT	1
23					CROSS BRACE, UPPER FRONT	1
24					CROSS BRACE, LOWER BACK	1
25					CROSS BRACE, UPPER BACK	1
26					CROSS BRACE, PUMP	1
27	P	764323	728		BOOT, RUBBER 4-1/2" LG.	1
28					CLAMP, HOSE 6"	2
29	P	764324	739		HEATER ASSEMBLY, (See Figure 7-2)	1
30					WELDMENT, BLOWER PLATE	1
31					PLATE, ORIFICE	1
32					U-PLATE, ORIFICE	1
33	P	764323	730		GASKET, ORIFICE	2
34	P	764323	731		BLOWER	1
35	P	764323	732		BLOWER STRIP	2
36					ELECTRICAL PANEL ASSEMBLY (See Figure 7-3)	1
37	P	764323	032		PREFILTER	1
38					CAP, INLET	1
39					CLAMP, HOSE 4"	1
40					INTERFACE, OUTLET	1
41					CLAMP ASSEMBLY	1
42					ETO PLUMBING (See Figure 7-4)	1
43					NOT USED	
44	P	764323	248		PUMP	1
	P	764323	249		• KIT, Repair	1
	P	764324	713		• MOTOR	1
	P	764324	714		• • CAPACITOR	1
45					PLATE, PUMP	1
46					PAD, PUMP	4
47					SNAP BUSHING, SUPPORT ANGLE	1
48					LABEL, DONALDSON	1
49					LABEL, CAUTION	1
50					LABEL, CAUTION, HOT SURFACE	1
51					LABEL, ETO INLET CONNECTION	1
52					LABEL, EXHAUST CONNECTION	1
53					LABEL, READ AND UNDERSTAND	2
54					LUG, LIFTING	

(Continued on Part 2 of 3)

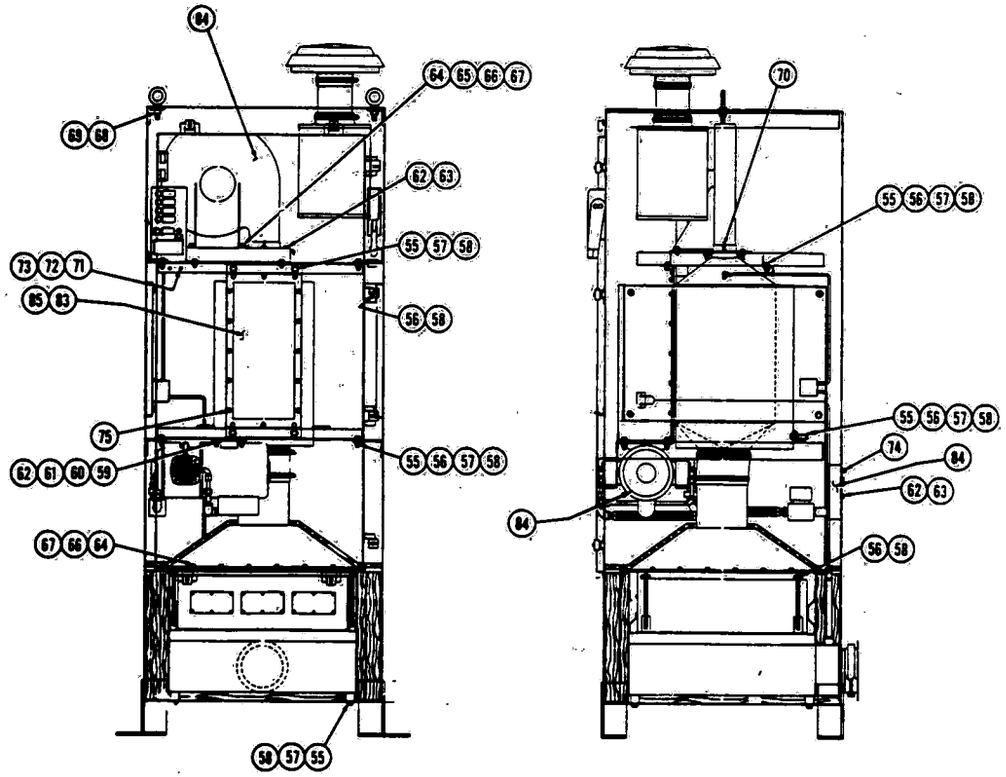

Figure 7-1. EO Disposer Assembly (Part 2 of 3)

FIG. & INDEX NO.	PART NUMBER	SVC	DESCRIPTION	UNITS PER ASSEMBLY
7-1-			ETO DISPOSER ASSEMBLY (Part 2 of 3)	X
55			BOLT, 3/8-16 HEX HD. x 1	24
56			NUT, 3/8-16 HEX	28
57			WASHER, FLAT, 3/8	38
58			LOCKWASHER, 3/8	36
59			BOLT, 5/16-18 HEX HD. x 1	4
60			NUT, 5/16-18 HEX, LOCKING, NYLOK	4
61			WASHER, FLAT, 5/16	8
62			LOCKWASHER, 5/16	10
63			BOLT, 5/16-18 HEX HD. x 3/4	6
64			BOLT, 1/4-20 HEX HD. x 1	31
65			NUT, 1/4-20 HEX	3
66			WASHER, FLAT, 1/4	34
67			WASHER, LOCK, 1/4	31
68			NUT, HEX, 1/2-13	2
69			WASHER, LOCK, 1/2	2
70			SCREW, NO. 10-32 x 1/2 THREAD FORMING	1
71			SCREW, NO. 8-32 x 1/2 ROUND HD.	2
72			LOCKWASHER, #8	2
73			NUT, #8-32	2
74			PLUG, PIPE, 1/4 NPT STD., SQ. HEAD	1
75			BOLT, 5/16" x 1 SELF-LOCKING, HEX HD.	16
76			LABEL, AMSCO	1
77			LABEL, WARNING, DOOR	1
78			LABEL, WARNING, AIR CLEANER	1
79			CAP, PLUG, ELEC.	2
80			CAP, PLUG, ETO INLET	1
81			CAP, PLUG, INLET	1
82			CAP, PLUG, OUTLET	1
83			BUSHING, SNAP, TOP OF HEATER	1
84			BUSHING, SNAP, 1/2" K.O. ELEC.	3
85			BUSHING, SNAP, BOTTOM OF HEATER	1
86			LABEL, FRENCH	1
87			LABEL, ELEC. DIAGRAM	1
88			LABEL, CSA	1
89			LABEL, ETL	1

(Continued on Part 3 of 3)

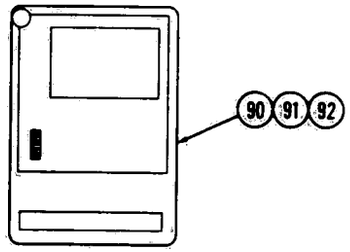

THERMOCOUPLE RECORDER (OPTIONAL)

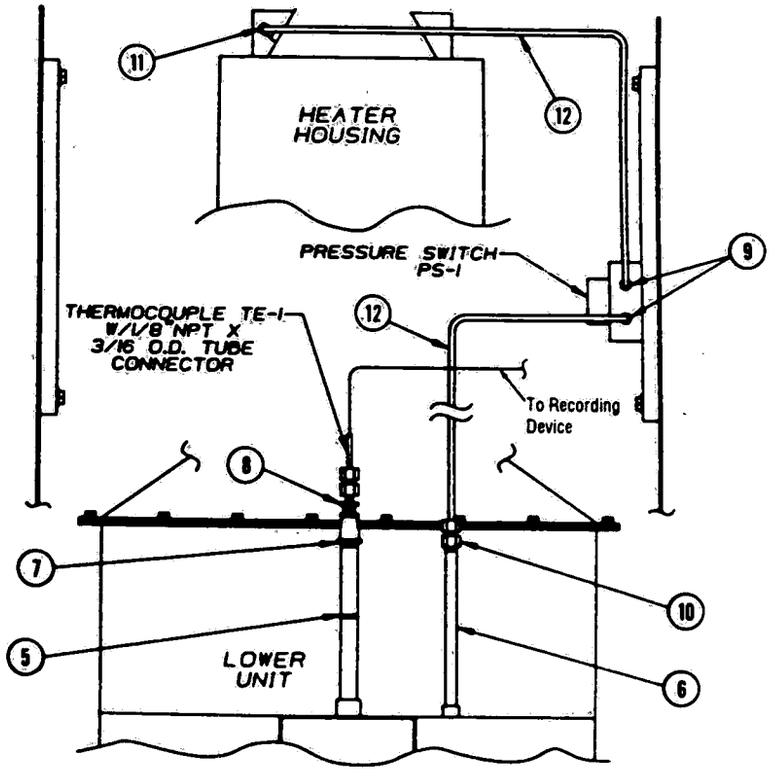

REAR VIEW

Figure 7-1. EO Disposer Assembly (Part 3 of 3)

FIG. & INDEX NO.	PART NUMBER	SVC	DESCRIPTION	UNITS PER ASSEMBLY
7-1-			ETO DISPOSER ASSEMBLY (Part 3 of 3)	X
5			PIPE, 1/2 NPT	1
6			PIPE, 1/4 NPT	1
7			COUPLING, REDUCING 1/2 x 1/4 NPT	1
8			BUSHING, REDUCING 1/4 x 1/8 NPT	1
9			CONNECTOR, MALE 1/8 NPT x 1/4 ODT	2
10			CONNECTOR, FEMALE 1/4 NPT x 1/4 ODT	1
11			ELBOW, MALE 1/4 NPT x 1/4 ODT	1
12			TUBE, SOFT COPPER 1/4" O.D. (73" REQ'D.)	1
90	P 764324 130		RECORDER, Thermocouple (Optional)	1
91	P 764324 131		• PAPER, Box	A/R
92	R 4024 123		WIRE, Thermocouple Lead	1

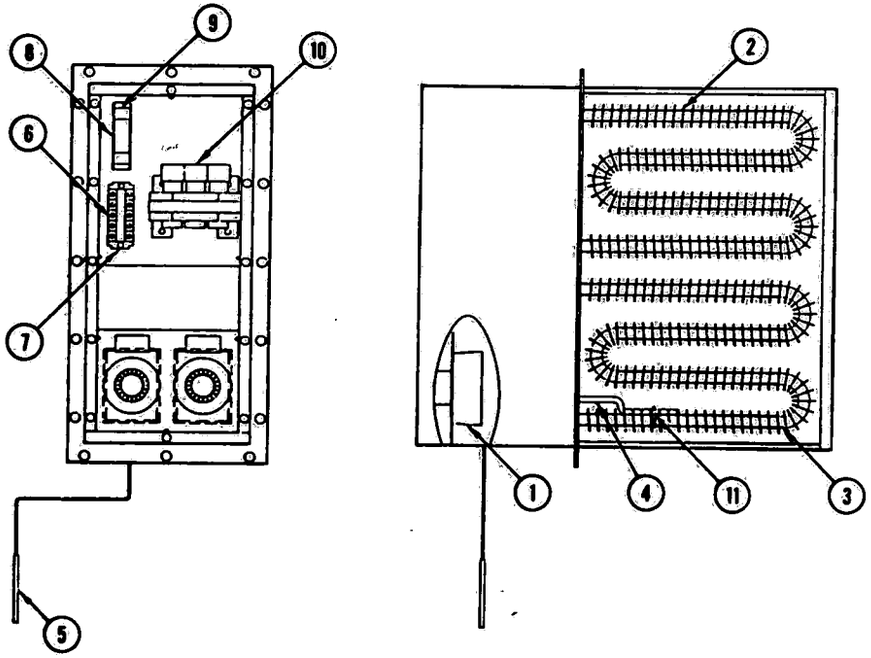

Figure 7-2. Heater Assembly, EO Disposer

FIG. & INDEX NO.	PART NUMBER			SVC	DESCRIPTION	UNITS PER ASSEMBLY
7-2-	P	764324	739		HEATER ASSEMBLY	X
1	P	764323	882		THERMOSTAT, ELECTRONIC	2
2	P	764323	883		HEATER ELEMENT	11
3	P	764323	884		HEATER ELEMENT, RTD	1
4	P	764323	885		RTD, HIGH LIMIT	1
5	P	764323	886		RTD, PROCESS CONTROL	1
6	P	764323	887		TERMINAL BLOCK SECTION	5
7	P	764323	888		TERMINAL END	2
8	P	764323	889		FUSE BLOCK	1
9	P	764323	890		FUSE, 1/4 AMP	1
10	P	764323	891		CONTACTOR	3
11	P	764323	892		CLAMP	1

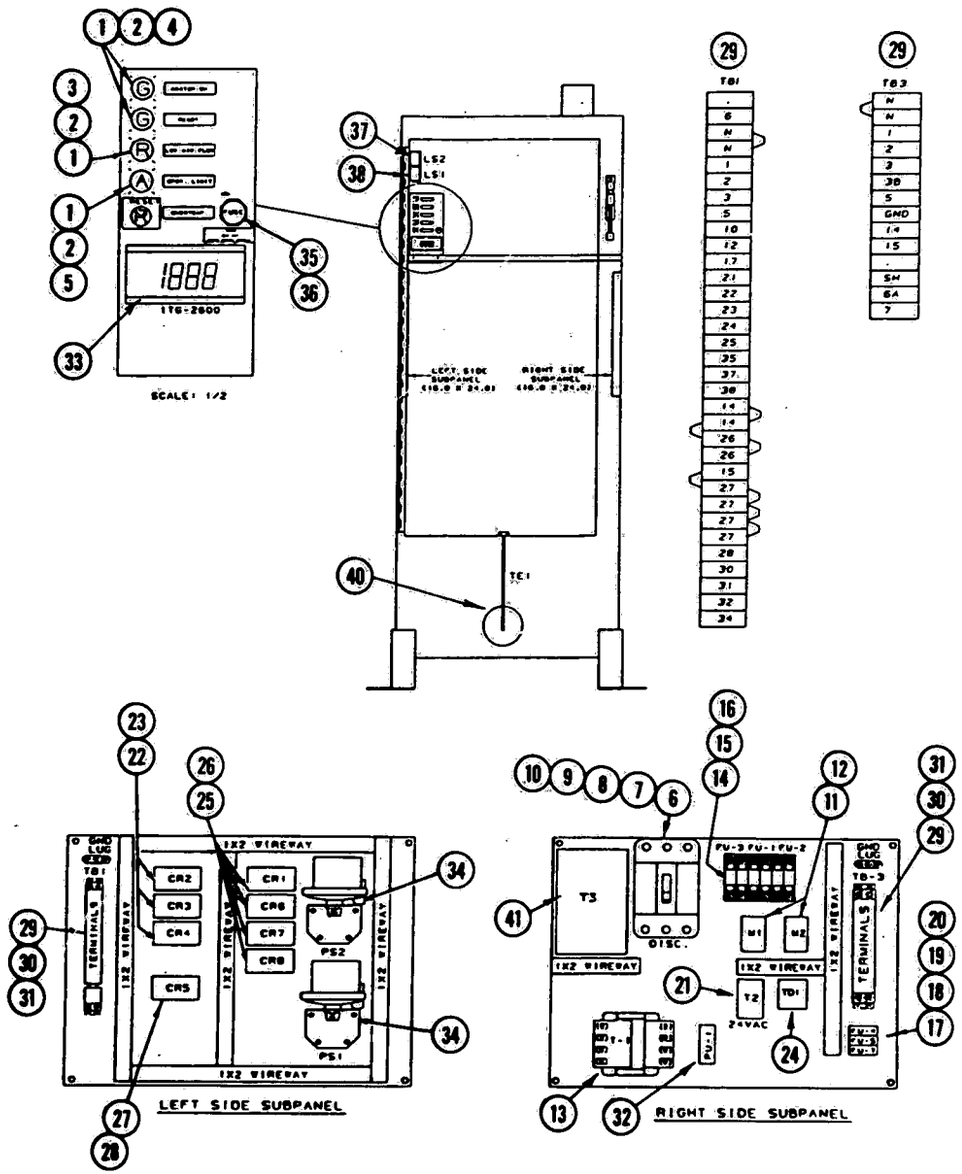

Figure 7-3. Electrical Assembly, EO Disposer

FIG. & INDEX NO.		PART NUMBER		S V C	DESCRIPTION	UNITS PER ASSEMBLY
7-3-					ELECTRICAL ASSEMBLY	X
1	P	764323	009		HOUSING, Pilot Light, Full Voltage, (PL1-4)	4
2	P	764323	733		LAMP, 24 Volt	4
3	P	764323	010		LENS, Red, (PL1)	1
4	P	764323	734		LENS, Green, (PL2,3)	2
5	P	764323	735		LENS, Amber, (PL4)	1
6	P	764323	736		CIRCUIT BREAKER, Main Disconnect, 40 Amp, 3-Pole, 240 Volt	1
7					• OPERATING MECHANISM	1
8					• HANDLE, Flange Operating	1
9					• CABLE, 48" Long	1
10					• LINE LUGS	3
11	P	764323	737		STARTER CONTACTOR, 2-Pole, 15 Amp, 120 Volt Coil, (M1, M2)	2
12	P	764323	007		SOCKET	2
13	P	764323	738		TRANSFORMER, 208/380 Volt Primary, 115 VAC Secondary, 500 VA, (T1)	1
14	P	764323	002		BLOCK, Fuse, 2-Pole, 250 Volt (FU1,2,3)	3
15	P	764323	014		FUSE, 8 Amp, 250 Volt, (FU1,2)	4
16	P	764323	015		FUSE, 3 Amp, 250 Volt, (FU3)	2
17	P	764323	739		BLOCK, Fuse, 3-Pole, 250 Volt (FU3,5)	1
18	P	764323	016		FUSE, 4 Amp, 250 Volt, (FU4)	1
19	P	764323	017		FUSE, 1 Amp, 250 Volt, (FU7)	1
20	P	764323	740		FUSE, 1/2 Amp, 250 Volt, (FU5)	1
21	P	764323	006		TRANSFORMER, 120 Volt Primary, 24 VAC Secondary, 40 VA, (T2)	1
22	P	764323	012		RELAY, 4-Pole, Double Throw, 24 VDC, (CR2,3,4)	3
23	P	764323	008		SOCKET	3
24	P	764323	741		TIMER, 30 Min. Fixed Delay, 120 VAC Coil, (TD1)	1
25	P	764323	012		RELAY, 24 VAC Coil, 4-Pole, Double Throw, (CR1,CR6,CR7,CR8)	4
26	P	764323	008		SOCKET	4
27	P	764323	742		LATCH RELAY, Double Pole, Double Throw, Magnetic Latch Type, 2VDC Coils, (CR5)	1
28	P	764323	007		SOCKET	1
29	P	764323	034		TERMINAL BLOCK, 600 V, 30 Amp, Retained, (TB1,TB3)	2
30	P	764323	035		END BARRIER	2
31	P	764323	036		END CLAMPS	2
32	P	764323	743		POWER SUPPLY, 24 DC, 115 VAC Input, 1.2 Amp, (PU1)	1
33	P	764323	039		DIGITAL TEMP. INDICATOR, 24 VDC Power, 4 Programmable Open Collector Outputs, (TI1)	1
34	P	764323	744		PRESSURE SWITCH, Differential Type, 0-2" H20, (PS1,PS2)	2
35	P	764323	745		FUSE HOLDER, Panel Mount, (FU6)	1
36	P	764323	746		FUSE, .75 Amp, 120 VDC	1
37	P	764323	747		SWITCH, Door Bypass, Push Momentary, Pull Maintained, (LS2)	1
38	P	764323	748		SWITCH, Door, Single Pole, Double Throw Momentary, (LS1)	1
39	P	764323	749		PUSH BUTTON, Illuminated, 24 VDC, Full Voltage, (ILPB1)	1
40	P	764323	872		THERMOCOUPLE, Type "J" Dual, 18" Length, Exposed Junction, (TE1)	1
41	P	764323	751		TRANSFORMER, Buck-Boost, 120/240 Primary, 12/24 Secondary, 150 KVA, (T3)	1

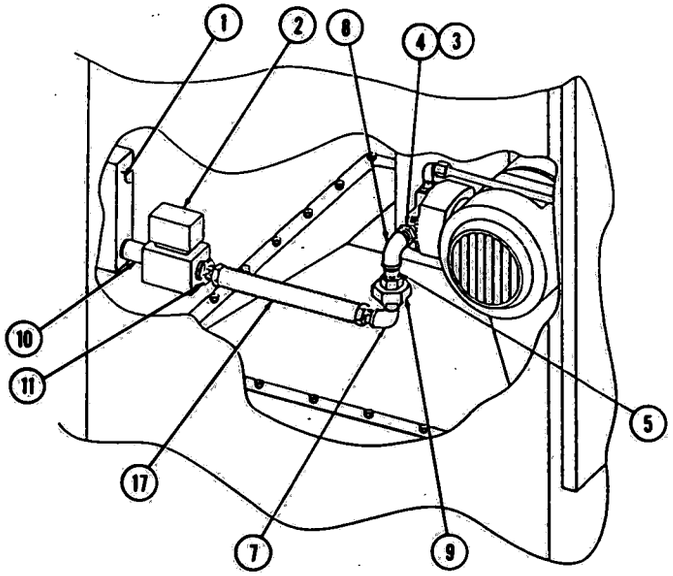

SIDE VIEW
(Vacuum Plumbing)

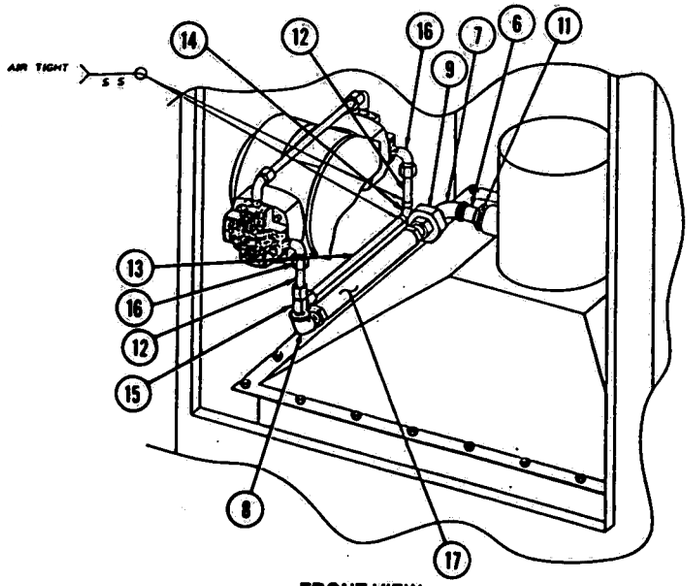

FRONT VIEW
(Pressure Plumbing)

Figure 7-4. Piping Assembly, EO Disposer

FIG. & INDEX NO.	PART NUMBER			SVC	DESCRIPTION	UNITS PER ASSEMBLY
7-4-					PIPING ASSEMBLY	X
1					BAR, Entrance	1
2	P	764323	005		VALVE, Solenoid, 3/4 NPT	1
	P	764070	002		• COIL, 120V, 60 Hz	1
	P	764324	031		• REPAIR KIT	1
3					NIPPLE, Close, 1/4 NPT	1
4					BUSHING, Reducing, 1/2 x 1/4 NPT	1
5					NIPPLE, 1/2 NPT x 1-1/2 LG.	1
6					NIPPLE, 1/2 NPT x 2 LG.	1
7					ELBOW, Street, 1/2 NPT x 90°	2
8					ELBOW, 1/2 NPT x 90°	2
9					UNION, Standard, 1/2 NPT	2
10					NIPPLE, 3/4 NPT x 2 LG.	1
11					BUSHING, Reducing, 3/4 x 1/2 NPT	2
12					TUBE, Copper, 3/8 ODT x 2-5/8 LG.	2
13					TUBE, Copper, 3/8 ODT x 9-3/8 LG.	1
14					ELBOW, 3/8 ODT x 90°	1
15					TEE, 1/2 NPT x 1/2 ODT	1
16					ELBOW, 1/4 NPT x1/2 ODT	2
17	P	764324	030		HOSE, 1/2" Corrugated, W/1/2 NPT Hex Male Fitting Welded Both Ends x 11-1/2" O/A Length	2

THIS PAGE
INTENTIONALLY LEFT
BLANK

REFERENCE DRAWINGS

DISPOSER		
Electrical Schematic Disposer 100 CFM	1 of 3 2 of 3 3 of 3	P19-3610
Wiring Connections Sterilizer/Disposer	1 of 2 2 of 2	93910-145
MEDALLION STERILIZERS		
Small Medallion Cryotherm Piping Schematic with Disposer	1 of 1	
Medium Medallion Cryotherm Piping Schematic with Disposer	1 of 1	
ETO Disposer Kit, Small Medallion	1 of 3 2 of 3 3 of 3	146655-109
Valve Assembly - Small Medallion w/Disposer	1 of 1	136807-659
EO Disposer Kit - Medium Medallion	1 of 3 2 of 3 3 of 3	146655-115
Valve Assembly - Medium Medallion w/Disposer	1 of 1	136807-660
Elementary Diagram - All Cryotherm Sterilizers	1 of 1	146655-103
Wiring Diagram - All Cryotherm Sterilizers	1 of 1	146655-104
Elementary Diagram Medallion Gas Sterilizers	1 of 1	146655-116
Wiring Diagram - All 24 x 36 Medallion Sterilizers with Disposer and Envirogard	1 of 1	146655-117
Electrical Schematic Medallion-Disposer/ Sequencer Interface	1 of 2 2 of 2	146657-254
Interface Box Assembly (Before 11/91)	1 of 2 2 of 2	146655-106
Interface Box Assembly (After 11/91)	1 of 3 2 of 3 3 of 3	146655-718

EAGLE 2000 STERILIZERS

Piping Schematic Eagle 20 x 20 w/IRC	1 of 1	
Piping Schematic Eagle 20 x 20 w/Printcon	1 of 1	
Piping Schematic Eagle 24 x 36 w/IRC	1 of 1	
Piping Schematic Eagle 24 x 36 w/Printcon	1 of 1	
ETO Disposer Kit Assembly 20 x 20 Eagle IRC 2000	1 of 3 2 of 3 3 of 3	146655-119
ETO Disposer Kit Assembly 20" Printcon	1 of 3 2 of 3 3 of 3	146653-868
Valve Assembly - 20" Gas Print. or IRC with Disposer	1 of 1	136806-983
ETO Disposer Kit Assembly 24 x 36 Eagle IRC Eagle 2000	1 of 4 2 of 4 3 of 4 4 of 4	146655-120
ETO Interface Kit Assembly 24 x 36 Printcon	1 of 4 2 of 4 3 of 4 4 of 4	146655-118
Valve Assembly 24 x 36 Eagle 2000 w/Disposer	1 of 1	136807-661
Electrical Schematic Eagle IRC w/Disposer	1 of 3 2 of 3 3 of 3	146655-121
Electrical Schematic	1 of 3 2 of 3 3 of 3	146653-873
IRC - Disposer Sequencer Interface	1 of 1	146657-256
Printcon - Disposer/Sequencer Interface	1 of 1	146657-255
Interface Box Assembly Prnt. & Rnd Chrt w/Disposer	1 of 1	136807-997

EAGLE 3000 STERILIZERS

Piping Schematic 20 x 20 Gas-Eagle 3000	1 of 1	146655-712
Piping Schematic Medium Gas-Eagle 3000	1 of 1	146655-713
ETO Disposer Kit Assembly 20" Eagle 3000 Gas	1 of 3 2 of 3 3 of 3	146655-710
Valve Assembly - 20" Eagle 3000 w/Disposer	1 of 1	136807-904
ETO Disposer Kit Assembly 24 x 36 Eagle 3000	1 of 3 2 of 3 3 of 3	146655-711
Valve Assembly 24 x 36 Eagle 3000 w/Disposer	1 of 1	136807-905
EO Sterilizer/Aerator Machine Schematic	1 of 2 2 of 2	146655-583
Eagle 3000 Disposer/Sequencer Interface	1 of 1	146657-275
Interface Box Assembly Eagle 3000/Gas w/Disposer	1 of 1	136807-908

AERATORS & MISCELLANEOUS

Wiring Connections Aerator w/Disposer	1 of 3 2 of 3 3 of 3	136807-670
Schematic Modified Aerator w/Disposer	1 of 1	136807-671
Electrical Schematic Eagle Disposer/Sequencer	1 of 3 2 of 3 3 of 3	146657-295
Wiring Connections Sequencer Control	1 of 2 2 of 2	136807-669
Interface Box Assembly	1 of 2 2 of 2	146655-107
PC Board Assembly, Disposer Interface	1 of 3 2 of 3 3 of 3	146655-715
Control Board, Eaglet II	1 of 2 2 of 2	146653-874/875

Service Kits

Service Repair Kit for Pump	1 of 1	764323-249
Disposer Water Trap Kit	1 of 2 2 of 2	755716-132
VS23 Installation Kit	1 of 2 2 of 2	755716-164

THIS PAGE
INTENTIONALLY LEFT
BLANK

DWG NO.	REV	ZONE	REVISION DESCRIPTION	APPROVAL/DATE
	1		SHOP AS BUILT	7/24/89
	2		ADDED BOOST TRANSFORMER	7/31/89
	3		RELEASED TO PRODUCTION	9/18/89

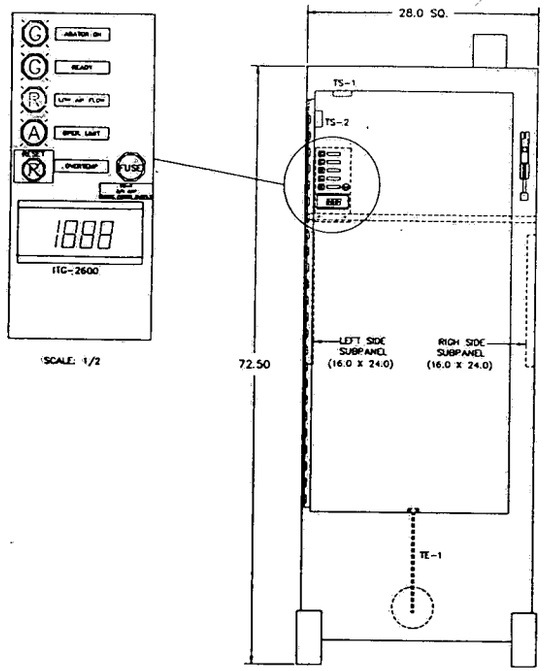

ABATOR
HOUSING ASSEMBLY
SCALE: 1/8

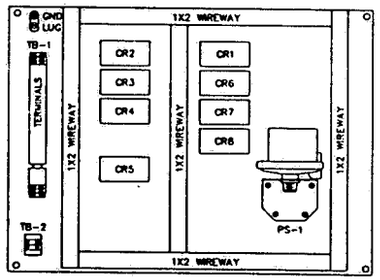

LEFT SIDE SUBPANEL
SCALE: 1/4

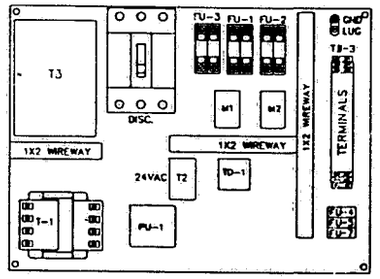

RIGHT SIDE SUBPANEL
SCALE: 1/4

BILL OF MATERIAL

ITEM NO.	QTY.	DESCRIPTION	CODE
1	4	Pilot Light, Full Voltage Housing Dialco #81-5710-01-303	PL1-4
	4	Lamp, 24 Volt - Sylvania #1819	
	1	Lens, Red - Dialco #26-1191-300	PL-2
	2	Lens, Green - Dialco #26-1192-300	PL-1,3
	1	Lens, Amber - Dialco #26-1193-300	PL-4
2	1	Main Disconnect Circuit Breaker, 40 Amp., 3-Pole, 240 Volt G.E. #TCB132040VL	MAIN DISC
	1	Operating Mechanism - Siemens #FHOEBO	
	1	Flange Operating Handle #FHOH	
	1	Cable, 48" Long - Siemens #FHOEC-048	
	3	Line Lugs LTE Electrical - #LN1-C100	
3	2	Starter Contactor, 2-Pole, 15 Amp. 120 Volt Coil Potter & Brunfield #KUMP-11A18-120	M-1, M-2
	2	Socket - T/E #HS0SL711	
4	1	Transformer 208/380 Volt Primary, 115 V/C Secondary, 500 VA G.E. #9T58B98	T-1
5	3	Fuse Block, 2-Pole, 250 Volt Marathon #30FA2SP	FU-1,2,3
	4	Fuse, 8 Amp., 250 Volt - Buss #FRN-R8	FU-1,2
	2	Fuse, 3 Amp., 250 Volt - Buss #FRN-R3	FU-3
6	1	Fuse Block, 3-Pole, 250 Volt Marathon #30FA3SP	FU-3,5
	1	Fuse, 4 Amp., 250 Volt - Buss #FRN-R4	FU-4
	1	Fuse, 1 Amp., 250 Volt - Buss #FRN-R1	FU-7
	1	Fuse, 1/2 Amp., 250 Volt - Buss #FRN-R1/2	FU-5
7	1	Transformer, 120 Volt Primary, 24 VAC Secondary, 40 VA Honeywell #AT720-1009	T-2
8	3	Relay, 4-Pole, Double Throw, 24 VDC Potter & Brunfield #KHAU17D11-24	CR-2,3,4,
	3	Socket - TE #HS0SL715	
9	1	Timer, 30 Minute Fixed Delay, 120 VAC Coil Syracuse Electronics #SBPABA13-30M	TD-1
10	4	Relay, 24 VAC Coil, 4-Pole Double Throw Potter & Brunfield #KHAU17A11-24 VAC	CR1,CR7 CR6,CR8
	4	Socket - TE #HS0SL-715	
11	1	Latch Relay, Double Pole, Double Throw, Magnetic Latch Type, 24VDC Coils Potter & Brunfield #KUL-11D150-24	CR5
	1	Socket - TE #HS0SL711	
12	45	Terminal Block, 600 Volt, 30 Amp, Retained Square D #9080-GR6	TB-1,TB-3
	2	End Barrier - Square D #9080-GR6B	
	4	End Clamps - Square D #9080-GH10	
13	1	Power Supply, 24 DC, 115 VAC Input 1.2 Amp Condor #HB24-1.2	PU-1
14	1	Digital Temperature Indicator, 24 VDC Power, 4 Programmable Open Collector Outputs Analogic #ITG-2600	TI-1
15	1	Pressure Switch, Differential Type 0-2" H2O Dwyer #1823-2	PS-1
16	1	Fuse Holder, Panel Mount Buss #HKP	FU-4
	1	Fuse, .75 Amp., 120 VDC Buss #HBA-3/4	
17	1	Door Bypass Switch, Push Momentary, Pull Maintained Micro Switch #1DM-430	LS-2
18	1	Door Switch, Single Pole, Double Throw Momentary Micro Switch #1DM1	LS-1
19	1	Illuminated Pushbutton, 24 VDC, Full Voltage G.E. #CR104AB.11AR18	ILPB-1
20	1	Type "J" Terminal Board Pyrometics #26-230-82	TB-2
21	1	Thermocouple Type "J" Dual, 18" Length Exposed Junction Pyrometics #JJ39818U1084	TC-1
22	1	Transformer, Buck - Boost, 120/240 Primary 12/24 secondary, .150 KVA G.E. # 9T51B105	T3

07/31/89 11:50 R3401A01

MATERIAL	RELEASE NO. 89A5742	TITLE 100 CFM ABATOR ELECTRICAL ASSEMBLY	Donaldson Industrial Group Minneapolis, MN
	DATE 9-18-89		
	EXP DATE 6-20-89		
	DWN WHO-H	NUMBER P19-3610	
REFERENCE	DATE 8/20/89		
	CHK		
NEXT ASSY. ET100-6500	DATE 8-25-89	SCALE AS NOTED / SHEET 1 OF 3	REVISION 3
PREVIOUS DRAWING NO.	APVD	C/C	
DO NOT SCALE / TOLERANCES UNLESS OTHERWISE SPECIFIED: 2 PL ±, 3 PL ±, ANGLES ±	DATE 28 SEP 89	SECTIONAL SIZE / OUTLINE SIZE	
	THIRD ANGLE PROJECTION	SERIAL CONTROL / DWG LOCATION	

All rights to manufacture, copy, reproduce, or dispose of this d... are reserved unless otherwise specified in writing by Donaldson Company, Inc.

CADD	REV	ZONE	REVISION DESCRIPTION	APPROVAL/DATE
CADD	1		SHOP AS BUILT	7/24/89
CADD	2		ADDED BOOSTER TRANSFORMER	7/28/89
CADD	3		ADDED SHEILDING AND GROUNDING	8/2/89
CADD	4		RELEASED TO PRODUCTION	NOV 13, 1989

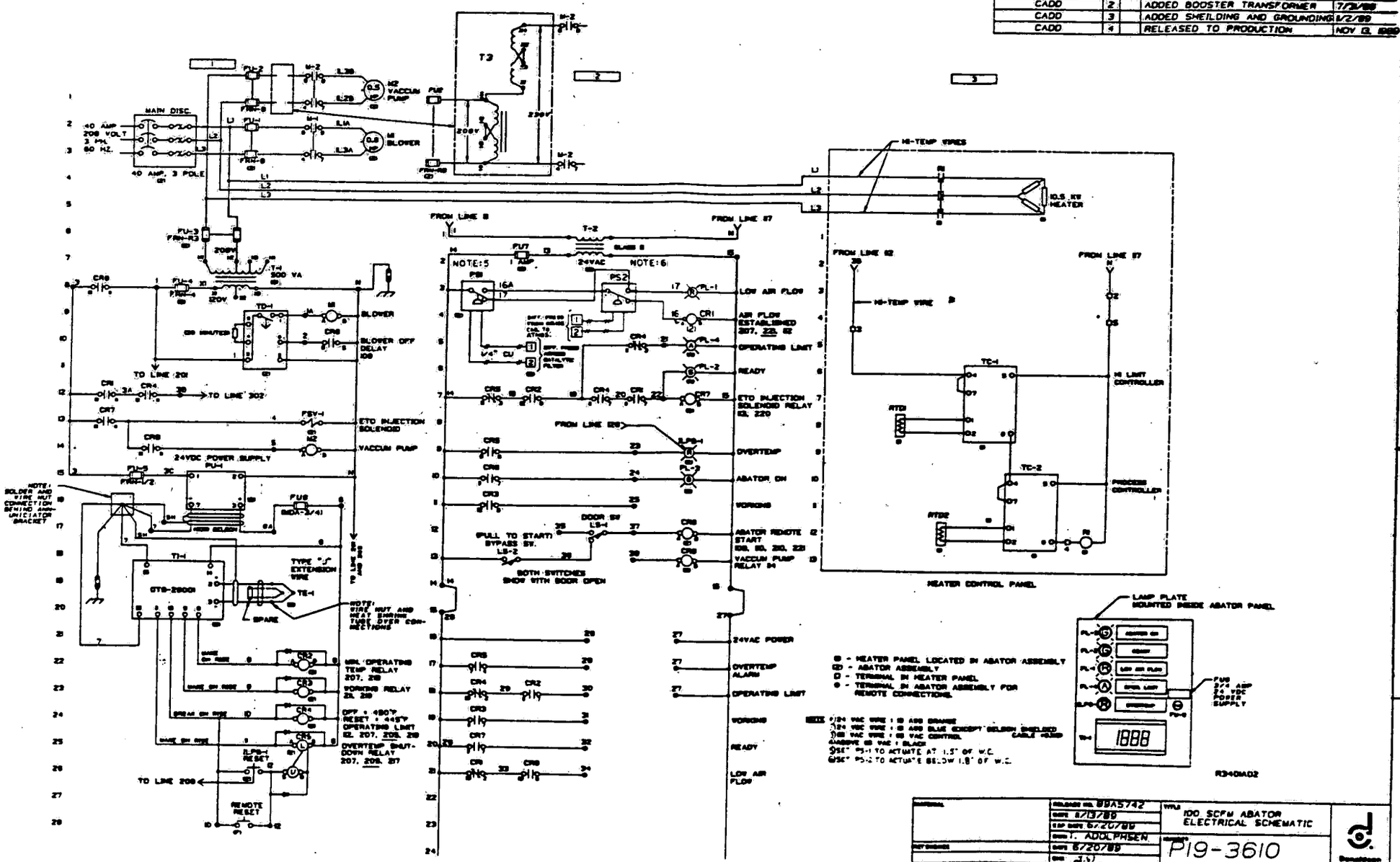

MATERIAL	DRAWING NO. 89A5742	TITLE 100 SCFM ABATOR ELECTRICAL SCHEMATIC
	DATE 8/13/89	
	CHP DATE 8/20/89	
NOT CHANGED	DRAWN T. ADOLPHSEN	DESIGNED P19-3610
	DATE 8/20/89	
NEXT ASS'T. ET100-8500	DATE 11-29-89	SCALE NONE / SHEET 2 OF 3
PREVIOUS DRAWING NO.	APPD	CAD CADD / REVISION 5
DO NOT SCALE	DATE 11-29-89	ELECTRICAL SHEET LX / DIFFLAND SHEET NO
	THIRD ANGLE PROJECTION	DESIGN CONTROL IV / DWG LOCATION IV

Donaldson Company, Inc. Minneapolis, MN

G- 3

G- 4

DWG NO.			
REV	ZONE	REVISION DESCRIPTION	APPROVAL/DATE
1		SHOP AS BUILT	7/25/89
2		ADDED BOOST TRANSFORMER	7/31/89
3		RELEASED TO PRODUCTION	9/18/89

MFG ANALOGIC

PART # ITG2600-OX-0
SUPPLIER: PROCESS MEASUREMENT CO.
MPLS, MINN.

INPUT THERMOCOUPLE TYPE J OR K (CIRCLE 1)

CONTROL SECTION SETUP PARAMETERS:

OUTPUT #	ACTION	SETPOINT	DEADBAND
1	HIGH	280	10
2	HIGH	330	10
3	LOW	440	10
4	HIGH	500	10

NOTE: IF HIGH ACTION IS SET, THEN THE RELAYS ENERGIZE (CLOSE) WHEN THE INPUT INCREASES ABOVE THE SETPOINT; THEY WILL DE-ENERGIZE (OPEN) BELOW THE SETPOINT MINUS THE DEADBAND VALUE.

IF LOW ACTION IS SET, THEN THE RELAYS ENERGIZE (CLOSE) WHEN THE INPUT DECLINES BELOW THE SETPOINT; THEY WILL DE-ENERGIZE ABOVE THE SETPOINT PLUS THE DEADBAND VALUE.

07/31/89 12:43 R3401A03

MATERIAL	RELEASE NO. 89A5742	TITLE 100 CFM ABATOR PROGRAM SETPOINT FOR ITG 2600	Donaldson Industrial Group Minneapolis, MN
	DATE 9-18-89		
	EFF DATE 6-20-89		
REFERENCE	DWN THAO-N	NUMBER P19-3610	
	DATE 6/20/89		
NEXT ASSY. 1X00-6500	CHK	SCALE NA / SHEET 3 OF 3 / REVISION 3	
PREVIOUS DRAWING NO.	DATE 9-21-89	C/C	
DO NOT SCALE / TOLERANCES UNLESS OTHERWISE SPECIFIED / 3 PL. ± / 2 PL. ± / ANGLES ±	APVD	SECTIONAL SIZE / OUTLINE SIZE	
	DATE 9-21-89	DESIGN CONTROL / DWG LOCATION / VERSION	
	THIRD ANGLE PROJECTION		D

All rights to manufacture, copy, reproduce, or disclose of this drawing in its entirety are reserved unless otherwise specified in writing by Donaldson Company, Inc.

G- 5

G- 6

REF.

DWG. NO.	SHEET OF
93910-145	1 OF 2

CAD DWG.

QUANTITY	PART NUMBER	ITEM NO.	PART NAME	DESCRIPTION, MATERIAL	REV NO	REVISION DATE
	93910-145	1	WIRING CONN.		7	11-01-91

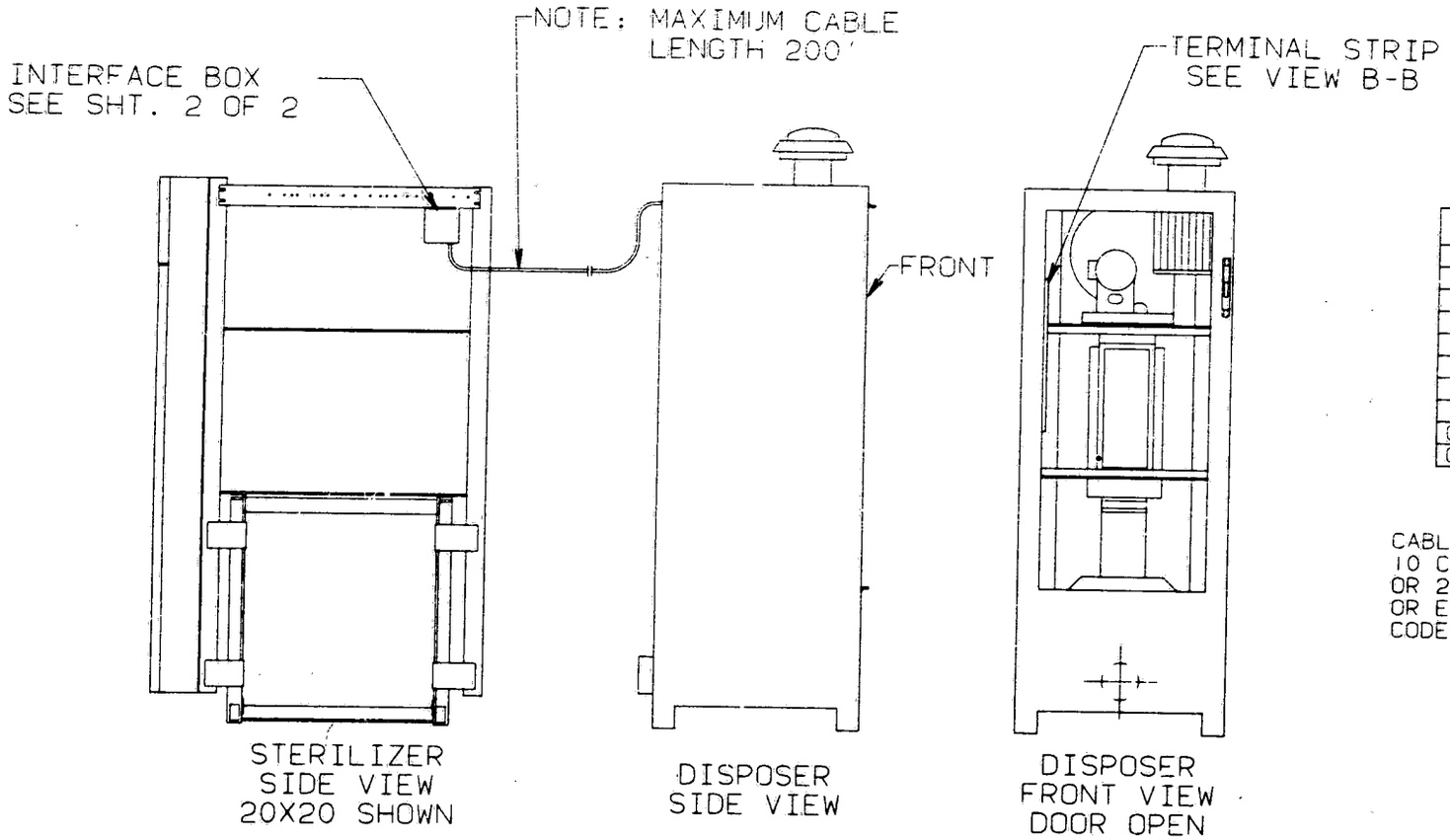

FUNCTION	WIRE #	TERM STRIP
POWER	27	TB#27
POWER RETURN	26	TB#26
VACUUM ON	38	TB#38
READY	32	TB#32
DISPOSER ON	37	TB#37
WORKING	31	TB#31
AIRFLOW	34	TB#34
OVERTEMP	28	TB#28
OVERTEMP RESET	10	TB#10
OVERTEMP RESET	12	TB#12

CABLE SPEC:
10 CONDUCTOR JACKETED CABLE, 22 OR 24 AWG, STRANDED, BELDEN #8456 OR EQUAL. CHECK STATE AND/OR LOCAL CODES.

REPRO MAINTAINED AT

7	11-01-91	910211

TOLERANCE STANDARD UNLESS OTHERWISE NOTED | FRACTIONAL ±1/64 DECIMAL ±.005 ANGULARITY±1° MACH. SURF 125

NO	DATE	E.C.A. NUMBER	NO	DATE	E.C.A. NUMBER
3	11-28-89	RA #82	6	07-17-90	900200
2	11-06-89	RA #71	6	07-17-90	RA#145
1	09-06-89	RA #54	5	06-13-90	RA#133
0	6-20-89	PER 25	4	05-08-90	RA 122

REVISIONS | REVISIONS

SCALE 1/10 1

AMERICAN STERILIZER COMPANY
ERIE, PENNSYLVANIA

THIS DRAWING SPECIFICATIONS AND ALL INFORMATION THEREIN ARE THE PROPERTY OF AMERICAN STERILIZER COMPANY ARE TO BE MAINTAINED CONFIDENTIAL ARE NOT TO BE COPIED OR USED IN ANY WAY DETRIMENTAL TO THE INTEREST OF AMERICAN STERILIZER COMPANY AND SHALL BE RETURNED UPON REQUEST.

AMSCO

DWN	CKD	ENG	MFG
JMT	JMT-G	LML	
DATE 1-5-89	DATE 6-20-89	DATE 6-20-89	DATE

TITLE WIRING, CONNECTIONS STERILIZER/DISPOSER

FIRST MADE FOR:

DWG. NO. 93910-145 | SHEET 1 OF 2

© AMSCO 1988

REF.

CAD DWG.

DWG. NO.	SHEET OF
93910-145	2 OF 2

QUANTITY	PART NUMBER	ITEM NO.	PART NAME	DESCRIPTION, MATERIAL	REV NO	REVISION DATE
	93910-145	1	WIRING CONN.		7	11-01-91

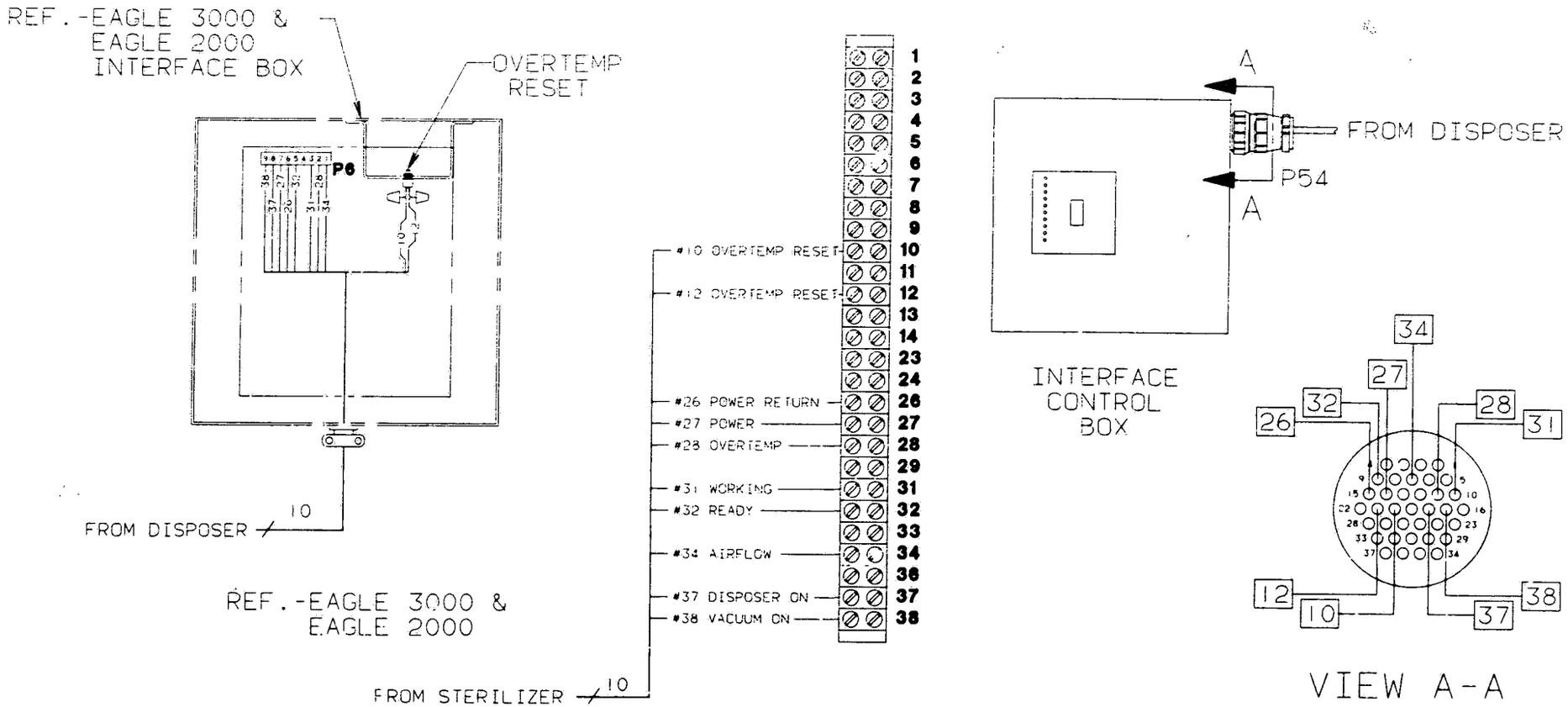

VIEW B-B
DISPOSER
TERMINAL STRIP

MEDALLION STERILIZER

TOLERANCE S ANDARD UNLESS OTHERWISE NOTED	FRACTIONAL ±1/64 DECIMAL ±.005 ANGULARITY±1° MACH. SURF 125

NO	DATE	E C A NUMBER	NO	DATE	E C A NUMBER
REVISIONS			REVISIONS		

AMERICAN STERILIZER COMPANY
ERIE, PENNSYLVANIA

THIS DRAWING SPECIFICATIONS AND ALL INFORMATION THEREIN ARE THE PROPERTY OF AMERICAN STERILIZER COMPANY ARE TO BE MAINTAINED CONFIDENTIAL ARE NOT TO BE COPIED OR USED IN ANY WAY DETRIMENTAL TO THE INTEREST OF AMERICAN STERILIZER COMPANY AND SHALL BE RETURNED UPON REQUEST

AMSCO

DWN JMT	CKD JMT-G	ENG LML	MFG
DATE 1-5-89	DATE 6-20-89	DATE 6-20-89	DATE

TITLE WIRING, CONNECTIONS STERILIZER/DISPOSER

FIRST MADE FOR:

DWG. NO. 93910-145 SHEET 2 OF 2

© AMSCO 1988

REPRO MAINTAINED AT

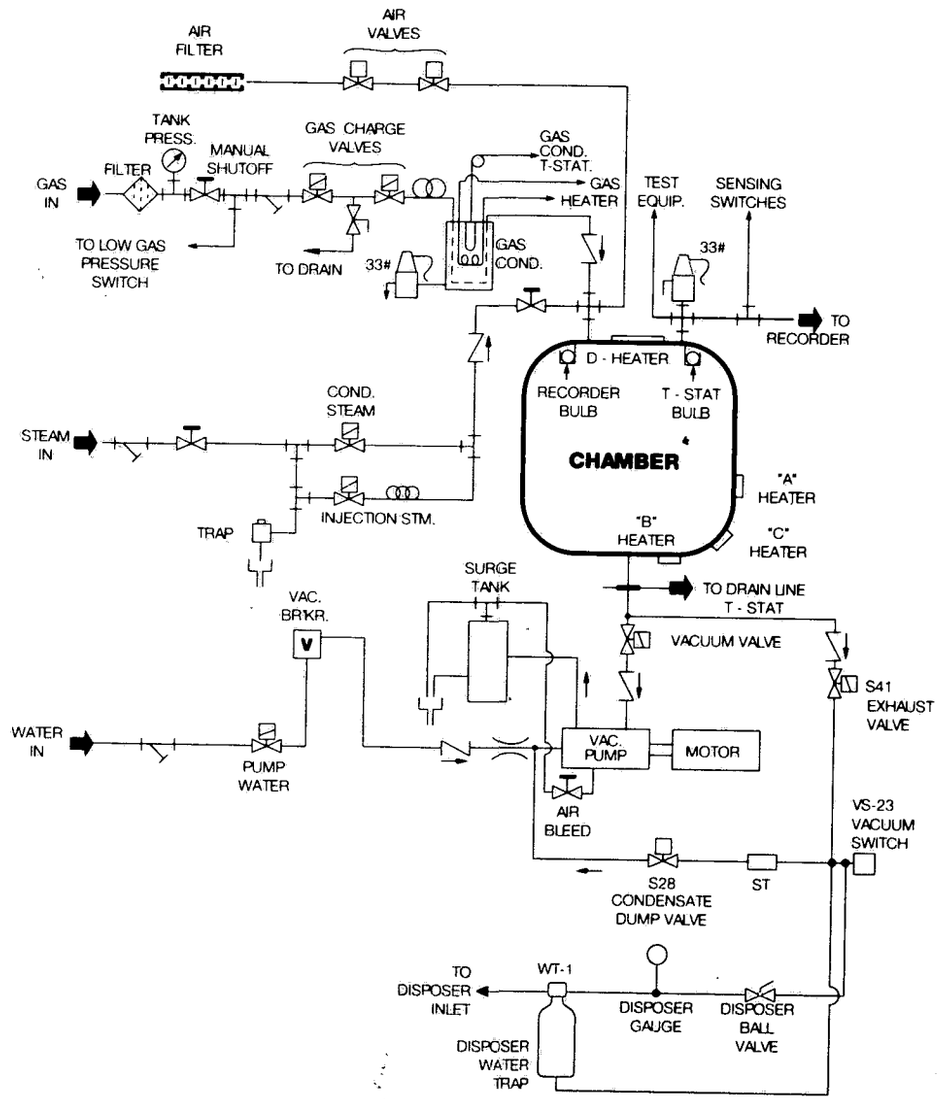

Small Medallion Cryotherm Piping Schematic

With Disposer

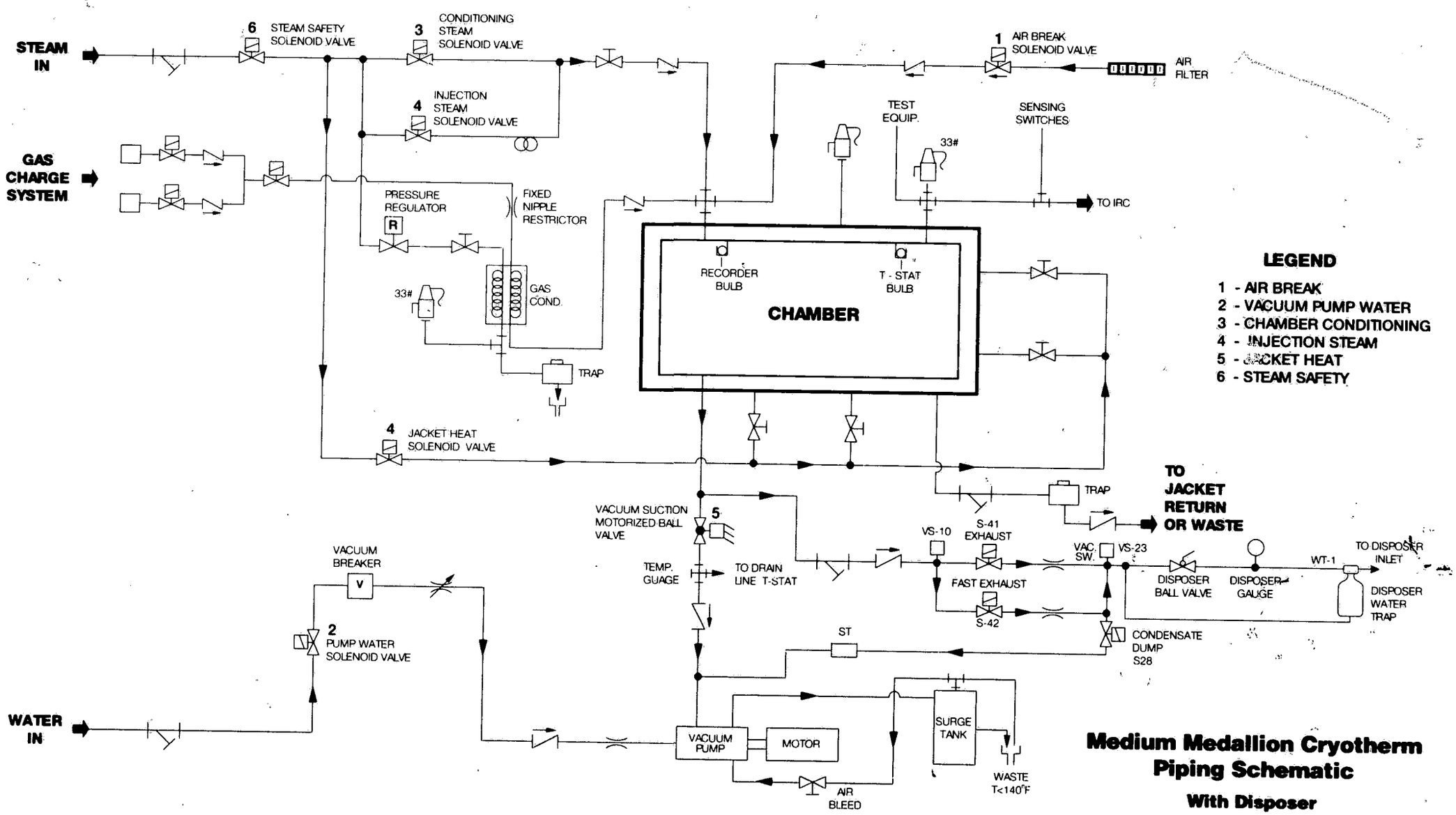
STEAM IN
6 STEAM SAFETY SOLENOID VALVE
3 CONDITIONING STEAM SOLENOID VALVE
4 INJECTION STEAM SOLENOID VALVE
1 AIR BREAK SOLENOID VALVE
AIR FILTER
GAS CHARGE SYSTEM
PRESSURE REGULATOR
R
FIXED NIPPLE RESTRICTOR
33#
GAS COND.
TRAP
TEST EQUIP.
33#
SENSING SWITCHES
TO IRC
RECORDER BULB
T - STAT BULB
CHAMBER
4 JACKET HEAT SOLENOID VALVE
TRAP
TO JACKET RETURN OR WASTE
VACUUM SUCTION MOTORIZED BALL VALVE
5
TEMP. GUAGE
TO DRAIN LINE T-STAT
VS-10
S-41 EXHAUST
VAC. SW.
VS-23
FAST EXHAUST
S-42
DISPOSER BALL VALVE
DISPOSER GAUGE
WT-1
TO DISPOSER INLET
DISPOSER WATER TRAP
CONDENSATE DUMP S28
ST
VACUUM BREAKER
V
2 PUMP WATER SOLENOID VALVE
WATER IN
VACUUM PUMP
MOTOR
SURGE TANK
AIR BLEED
WASTE T<140°F
LEGEND
1 - AIR BREAK
2 - VACUUM PUMP WATER
3 - CHAMBER CONDITIONING
4 - INJECTION STEAM
5 - JACKET HEAT
6 - STEAM SAFETY
Medium Medallion Cryotherm Piping Schematic
With Disposer

AMSCO

EO DISPOSER SYSTEM

INTERFACE: EAGLE 3000 & 2000, MEDALLION, AERATION CABINET

P-764323-254

DWG. NO. 146655-109 | 1 OF 3

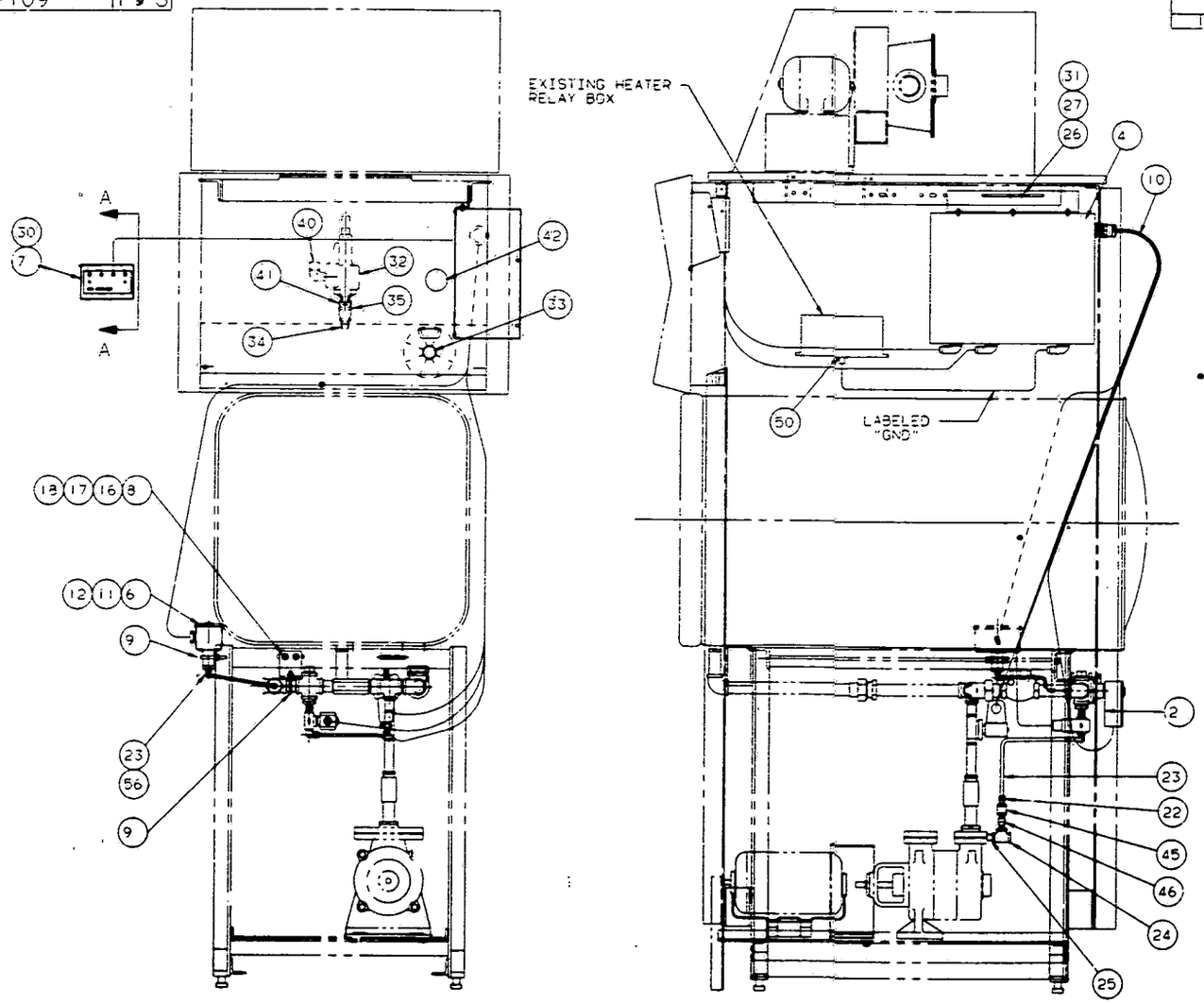

QUANTITY	PART NUMBER	ITEM NO.	PART NAME	DESCRIPTION, MATERIAL	REV. NO.	REVISION DATE
X	146655-109	1	DISPOSER KIT	20" MEDALLION	9	03-06-92
1	136807-659	2	VALVE ASS'Y	S41, S28		
1	146655-103	3	SCHEMATIC, ELEC.	REF. DWG.		
1	146655-718	4	BOX, INTERFACE			
1	129361-106	5	INSTALL. INST.	REF. DWG.		
1	83866-001	6	SWITCH, VACUUM			
1	93910-136	7	LIGHT BOX ASS'Y			
1	93910-138	8	BRKT, PIPE SPT.			
2	118398-045	9	U BOLT	1/4" (W/NUTS & CLAMP)		
1	136807-915	10	CABLE			
1	129361-132	11	BOX, MODIFIED			
1	129361-131	12	COVER, BOX			
1	129361-116	13	FLAT ELL			
2	129361-115	14	WALLTRACK	5' LG.		
2	129361-117	15	SPLICE, WALLTRACK			
6	9316-041	16	SCREW, RD. HD.	#10-32 X 3/4" LG.		
6	20844-061	17	WASHER, FLAT	.203 ID X .438 OD X .031 THK		
6	129359-532	18	NUT, KEPS	#10-32		
14	18538-091	19	NUT, WIRE			
3	129326-001	20	MOUNT, HARNESS			
6	84104-001	21	TIE, WIRE			
3	34218-091	22	FITTING, STR.	1/4 OD X 1/4" NPT		
1		23	TUBING, COPPER	1/4" OD X 168" LG. SEE NOTE #2		
1	4906-091	24	TEE	1/4" NPT		
2	28917-091	25	NIPPLE	1/4" NPT X 1" LG.		
1	129359-533	26	NUT, KEPS	1/4-20		
1	150473-295	27	WASHER, FLAT	.281 ID X .625 OD X .063 THK.		
1		28	PRINT	REF. P/N 146655-109 SEE NOTE #3		
1	146655-104	29	WIRING DIA.			
6	91354-045	30	SQUEEZE CLAMP			
4	3952-041	31	SCREW, RD. HD.	1/4-20 X 1/2" LG.		
1	150828-475	32	VALVE, SAFETY	1/2 NPT. SEE NOTE #5		
1	93910-118	33	LABEL, PHASE INDICATOR			
1	29013-091	34	NIPPLE, BRASS	3/8 NPT X 1" LG.		
1	84443-001	35	BUSHING, REDUCING	3/4 NPT X 3/8 NPT		
1	129361-125	36	EQUIPMENT, MANUAL	REF. DWG.		
2	12529-061	37	SCREW, RD. HD.	#6-32 X 1/4" LG.		
1	49087-044	38	PLUG, BUTTON			
1	93910-145	39	WIRING CONNECTIONS	DISPOSER - REF. DWG.		
1	44500-091	40	ELL, 90°	SOLDER JOINT FITTING		
1	836-091	41	BUSHING, REDUCING	3/4 NPT X 1/2 NPT		
1	150822-588	42	LENS, AERATING			
3	150778-001	43	VARISTOR			
1	150777-001	44	CAPACITOR	0.1 MFD, 500V		
1	45589-091	45	COUPLING	1/4 NPT		
1	150828-262	46	VALVE, CHECK			
1	90331-091	47	CONN, STR	3/8		
1	24748-091	48	BUSHING	3/8		
25	129361-697	49	CONTACT, PIN	24-20 AWG		
1	939-091	50	RED BUSHING	1/8 NPT X 1/4 NPT		
1	76053-091	51	RED BUSHING	1/2 NPT X 1/4 NPT		
1	90525-091	52	GAUGE	1/8 NPT		
1	129356-508	53	TEE, SOLDER	7/8 ODT X 7/8 ODT X 1/2 NPT		
1	93910-642	54	VALVE, BALL	7/8 ODT		
1	764317-524	55	TAPE, TEFLON			
1	42510-091	56	FTG ELL, COMP	1/4 ODT X 1/8 NPT		
1	93910-653	57	TRAP, WATER	3/4 NPT		
1	22472-091	58	BUSHING, RED.	3/4 NPT X 1/4 NPT		
1	45407-091	59	ELL, COMP	1/4 ODT X 1/4 NPT		
1	129362-980	60	GUIDELINES, DISPOSER			
1	146657-254	61	SCHEMATIC			
1	150822-048	62	VALVE, BALL			

NOTES:

1. USE PIPE SEALANT PER AMSCO DWG. 150822-020 ON ALL THREADED PIPE JOINTS.
2. COPPER TUBING.030 WALL X 1/4"OD.SOFT ANNEALED.ASTM B280.
3. INCLUDE WITH EACH KIT ONE PRINT, P/N 146655-109.
4. MOUNT LIGHT BOX ASS'Y TO BEST SUIT. EITHER USE WALLTRACK COMPONENTS (ITEM #13,#14,#15) OR USE CLAMP (ITEM #30) FOR ENTRY INTO BACK OF LIGHT BOX ASS'Y.
5. REPLACE EXISTING SAFETY VALVE WITH ITEM #32.

REV	DATE							
3	04-09-90	RA 114	7	10-23-90	RA#181			
2	02-[illegible]-90	RA#104	6	07-17-90	RA#153			
1	6-20-89	RA 27	5	06-06-90	RA#132	9	03-06-92	920052
0	06-07-89	PER#15	4	05-23-90	RA#128	8	11-18-91	910211
						7	10-23-90	900200

TOLERANCE STANDARD UNLESS OTHERWISE NOTED | FRACTIONAL ±1/64 DECIMAL ±.005 ANGULARITY±1° MACH. SURF 125

AMSCO AMERICAN STERILIZER COMPANY ERIE, PENNSYLVANIA

TITLE: ETO DISPOSER KIT SMALL MEDALLION

FIRST MADE FOR:

DWG. NO. 146655-109 | 1 OF 3

CAD DWG.

A- 1

A- 2

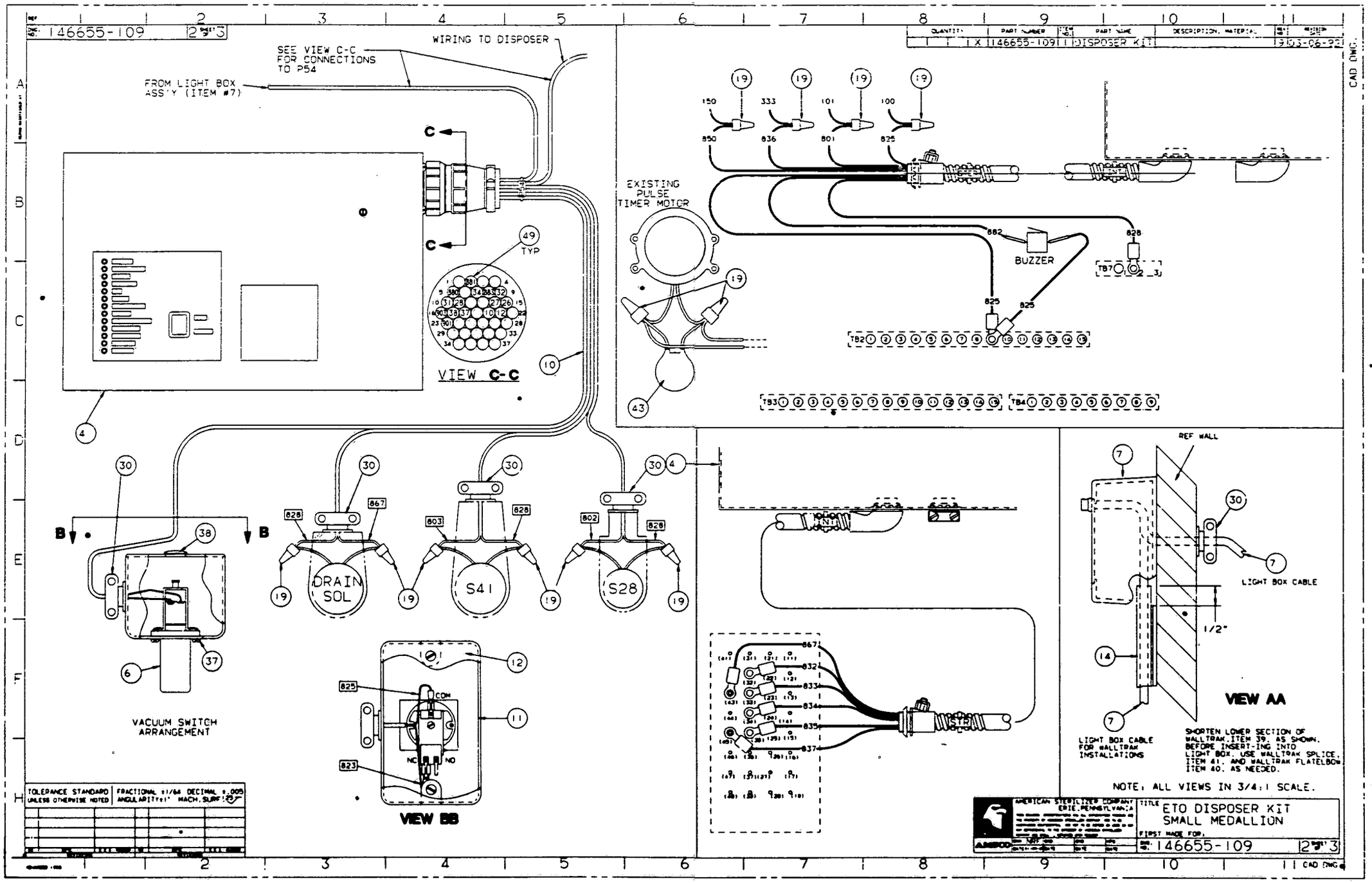
146655-109
WIRING TO DISPOSER
SEE VIEW C-C FOR CONNECTIONS TO P54
FROM LIGHT BOX ASS'Y (ITEM #7)
VIEW C-C
EXISTING PULSE TIMER MOTOR
BUZZER
DRAIN SOL
S41
S28
VACUUM SWITCH ARRANGEMENT
VIEW BB
VIEW AA
REF WALL
LIGHT BOX CABLE
LIGHT BOX CABLE FOR WALLTRAK INSTALLATIONS
SHORTEN LOWER SECTION OF WALLTRAK, ITEM 39, AS SHOWN, BEFORE INSERT-ING INTO LIGHT BOX. USE WALLTRAK SPLICE, ITEM 41, AND WALLTRAK FLATELBOW ITEM 40, AS NEEDED.
NOTE: ALL VIEWS IN 3/4:1 SCALE.
AMERICAN STERILIZER COMPANY ERIE, PENNSYLVANIA
ETO DISPOSER KIT SMALL MEDALLION
146655-109
TOLERANCE STANDARD UNLESS OTHERWISE NOTED
FRACTIONAL ±1/64 DECIMAL ±.005 ANGULARITY ±1° MACH. SURF.

A- 3

A- 4

146655-109 | 3 SHEET 3

QUANTITY	PART NUMBER	ITEM NO.	PART NAME	DESCRIPTION, MATERIAL	REV LTR	REVISION DATE
1	X 146655-109	1	DISPOSER KIT			1993-06-30

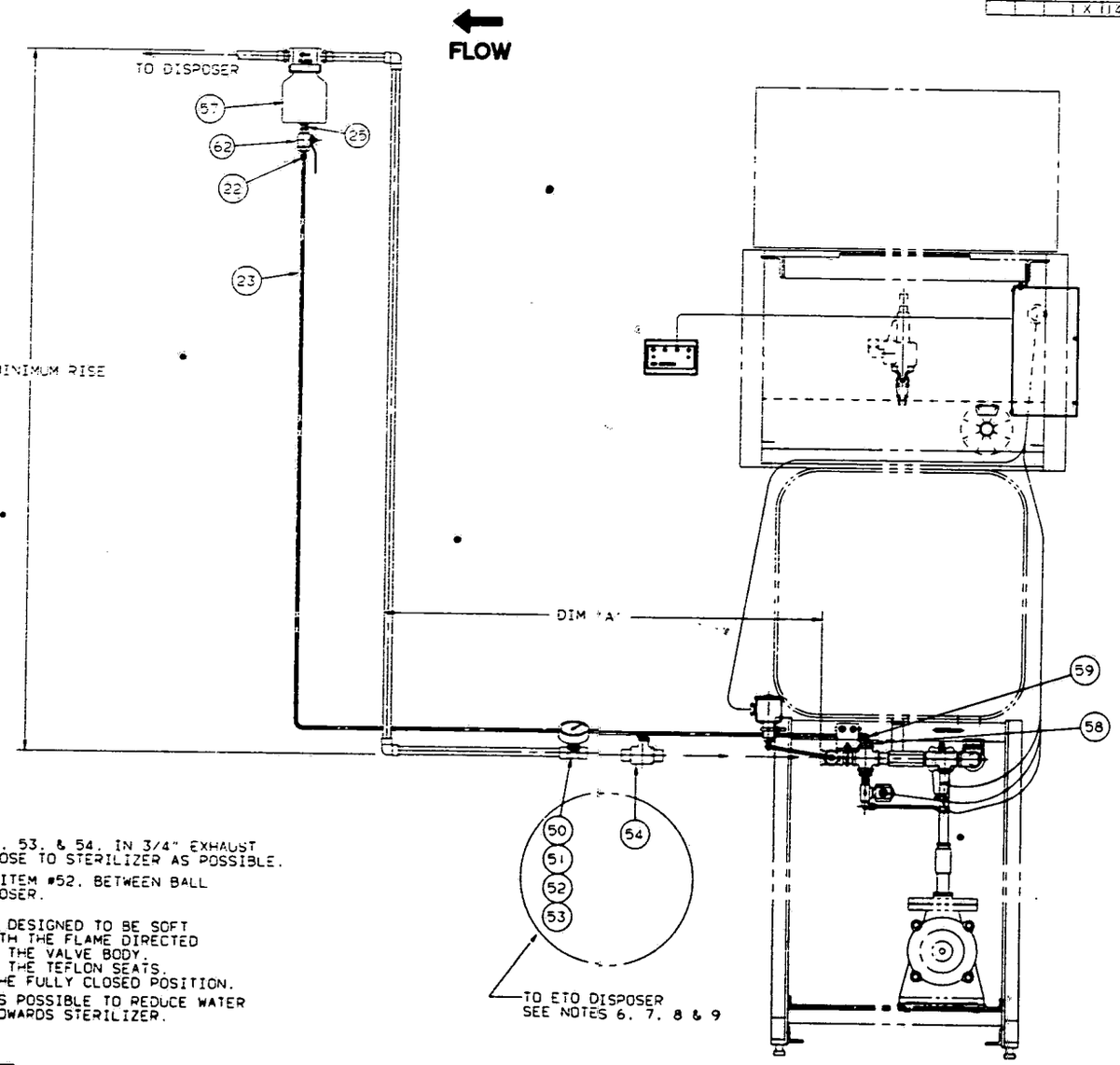

NOTES: (CONT)

6. LOCATE ITEMS 50, 51, 52, 53, & 54, IN 3/4" EXHAUST LINE TO DISPOSER, AS CLOSE TO STERILIZER AS POSSIBLE.
7. LOCATE COMPOUND GAUGE, ITEM #52, BETWEEN BALL VALVE, ITEM #54, & DISPOSER.
8. BALL VALVE (ITEM 54) IS DESIGNED TO BE SOFT SOLDERED. APPLY HEAT WITH THE FLAME DIRECTED AWAY FROM THE CENTER OF THE VALVE BODY. EXCESSIVE HEAT CAN HARM THE TEFLON SEATS. SOLDER VALVES ONLY IN THE FULLY CLOSED POSITION.
9. MAKE DIM "A" AS SHORT AS POSSIBLE TO REDUCE WATER FORMATION. SLOPE LINE TOWARDS STERILIZER.

TOLERANCE STANDARD UNLESS OTHERWISE NOTED	FRACTIONAL ±1/64 ANGULARITY ±1°	DECIMAL ±.005 MACH. SURF. 125

AMSCO — AMERICAN STERILIZER COMPANY, ERIE, PENNSYLVANIA

TITLE: ETO DISPOSER KIT SMALL MEDALLION

FIRST MADE FOR:

DWG. NO. 146655-109 | 3 SHEET 3

CAD DWG.

A- 5

A- 6

DWG. NO. 136807-659 | SHEET 1 OF 1

QUANTITY			PART NUMBER	ITEM NO.	PART NAME	DESCRIPTION, MATERIAL	REV NO.	REVISION DATE
		X	136807-659	1	VALVE ASSY	20" MEDALLION	2	11-01-91
	1		83228-002	2	VALVE, SOL.	3/4" NPT		
	1		150828-444	3	VALVE, CHECK	3/4" NPT		
	1		129360-765	4	ORIFICE, FL. CONT.	3/4 NPT		
	1		4932-091	5	TEE	3/4" NPT		
	1		4923-091	6	TEE	3/4"NPT X 3/4"NPT X 1/2"NPT		
	1		89986-091	7	ELL, UNION	3/4" NPT		
	1		1635-091	8	ELL	3/4" NPT		
	1		41306-091	9	ELL, COMP	1/4" NPT X 1/4" ODT		
	1		3443-091	10	PLUG, PIPE	3/4" NPT		
	2		3439-091	11	PLUG, PIPE	1/8" NPT		
	4		29290-091	12	NIPPLE, BRASS	3/4" NPT X 1" LG.		
	1		77774-091	13	NIPPLE, STRAINER	1/4" NPT		
	1		45565-091	14	FITTING, COMP.	1/4" ODT X 1/4" NPT		
	2		29293-091	15	NIPPLE, BRASS	3/4" NPT X 1 3/4" LG.		
	1		1345-091	16	CROSS	3/4" NPT		
	2		22472-091	17	REDUCER	3/4" NPT X 1/4" NPT		
				18				
	1		150822-934	19	VALVE, SOL.	1/4" NPT		
	1		29303-091	20	NIPPLE	3/4" NPT X 4 1/4" LG.		

NOTES:

1. USE PIPE SEALANT PER AMSCO DWG. 150822-020 ON ALL THREADED PIPE JOINTS.
2. LABEL COMPONENTS AS SHOWN WITH BRADY MARKERS. BLACK LETTERS ON YELLOW BACKGROUND.

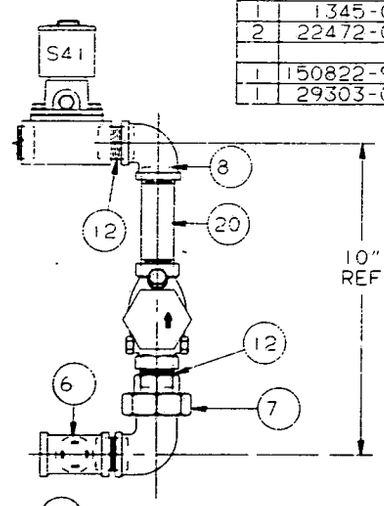

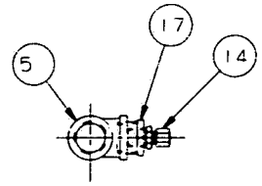

VIEW A-A

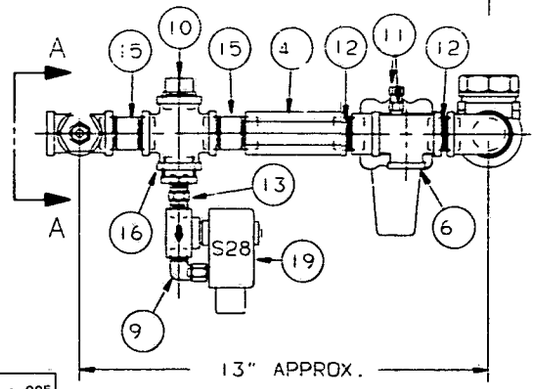

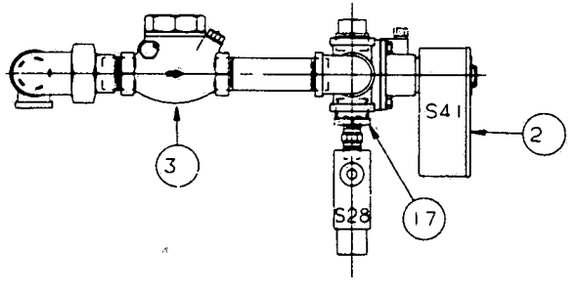

TOLERANCE STANDARD UNLESS OTHERWISE NOTED | FRACTIONAL ±1/64 DECIMAL ±.005 ANGULARITY±1° MACH. SURF 125

NO	DATE	E.C.A. NUMBER	NO	DATE	E.C.A. NUMBER
2	11-01-91	910211			
1	07-19-90	900200			
1	07-19-90	900129			
0	06-02-89	PER #18			

REVISIONS

SCALE 3/8 : 1

AMERICAN STERILIZER COMPANY
ERIE, PENNSYLVANIA

THIS DRAWING SPECIFICATIONS AND ALL INFORMATION THEREIN ARE THE PROPERTY OF AMERICAN STERILIZER COMPANY AND TO BE REGARDED CONFIDENTIAL. NOT MAY TO BE COPIED OR USED IN ANY WAY DETRIMENTAL TO THE INTEREST OF AMERICAN STERILIZER COMPANY AND SHALL BE RETURNED UPON REQUEST.

AMSCO

DWN	CKD	ENG	MFG
NPF	JT-G	LML	SDN
DATE 6-05-89	DATE 6-2-89	DATE 6-2-89	DATE 6-2-89

TITLE VALVE ASSEMBLY - SMALL MEDALLION W/DISPOSER

FIRST MADE FOR: 146655-109

DWG. NO. 136807-659 | SHEET 1 OF 1

© AMSCO 1988

CAD DWG.

146655-115

NOTES:

1. USE PIPE SEALANT PER AMSCO DWG. 150822-020 ON ALL THREADED PIPE JOINTS.
2. COPPER TUBING .030 WALL X 1/4" OD. SOFT ANNEALED. ASTM B280.
3. AFTER ATTACHING SUPPORT ANGLES, ITEM 14, TO UNIT, POSITION SUPPORT ANGLE, ITEM 15, AS SHOWN, MARK REQD. LENGTH, AND CUT OFF TO SAID LENGTH. DRILL 5/16" DIA. CLEARANCE HOLES THRU BOTH SUPPORTS AND ATTACH TO UNIT USING HEX. HDS. SCREWS, FLAT WASHERS AND KEPS NUTS, ITEMS 8, 9, & 10.
4. POSITION SUPPORT PLATE, ITEM 7, AS REQD. AND, USING PLATE AS A TEMPLATE, DRILL TWO (2) 5/16" DIA. HOLES THRU STAND CHANNEL. SECURE SUPPORT PLATE TO CHANNEL USING HEX. HD. SCREWS, FLAT WASHERS, AND KEPS NUTS, ITEMS 8, 9 & 10.
5. INCLUDE A COPY OF THIS DRAWING IN EACH KIT.
6. REPLACE CHAMBER SAFETY VALVE WITH SAFETY VALVE, ITEM 25.
7. USE EITHER OPTION #1 OR OPTION #2 FOR SUPPORTING VALVE ASSEMBLY, (ITEM #2), WHICHEVER BEST SUITS.
8. COPPER TUBING .049 WALL x 1/2 ODT, ASTM B880 SOFT TYPE K.

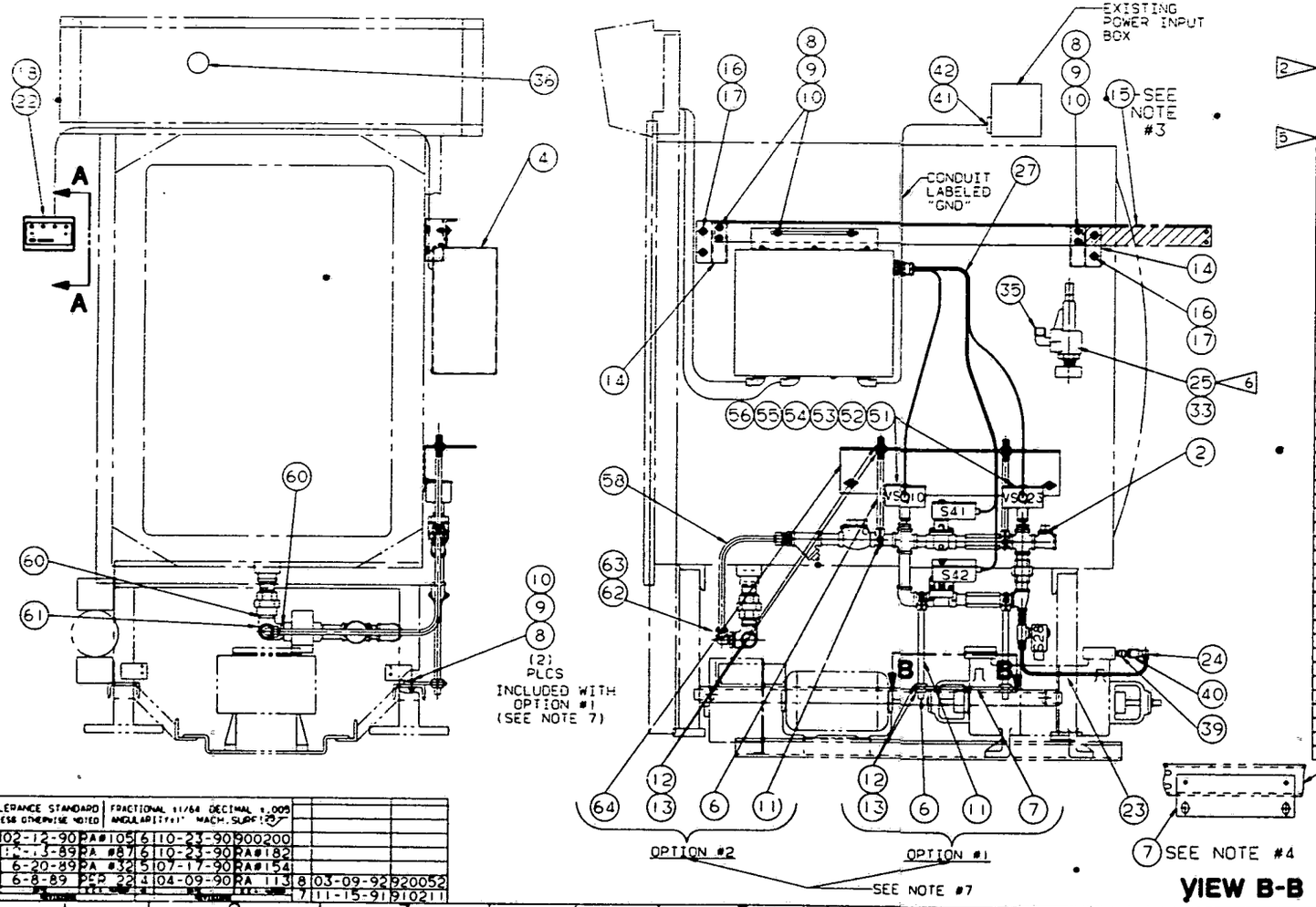

QUANTITY	PART NUMBER	ITEM NO.	PART NAME	DESCRIPTION, MATERIAL	REV.	CHANGE
	146655-115	1	DISPOSER KIT	MEDIUM MEDALLION	1	603-09-92
1	136807-660	2	ASSEMBLY,	VALVE-S23, S41, S42		
1	146655-116	3	SCHEMATIC,	ELECTRIC -REF. DWG.		
1	146655-718	4	BOX, INTERFACE	MEDALLION		
1	129361-106	5	INSTRUCTIONS	INSTALL. -REF. DWG.		
2	129361-122	6	SUPPORT, PIPE	1/4" NPT X 9"		
1	93910-144	7	PLATE, SPRT.			
8	81667-008	8	SCREW, HX. HD.	1/4-20 X 1"		
8	150473-295	9	WASHER, FL.	1/4		
8	129359-533	10	NUT, KEPS	1/4-20		
2	39590-010	11	CLAMP, PIPE	3/4"		
4	150828-689	12	NUT, LOCK	1/4-18 NPSL		
4	52148-045	13	LOCKWASHER	9/16" ID		
2	150019-001	14	SUPPORT,	ANGLE		
1	56396-118	15	SUPPORT,	ANGLE		
4	2948-045	16	NUT, HEX. JAM	3/8-16		
4	19680-041	17	LOCKWASHER	3/8"		
1	93910-136	18	ASSEMBLY,	LIGHT BOX		
1	129361-116	19	FLAT ELL			
2	129361-115	20	WALL TRACK	5' LG.		
3	129361-117	21	SPLICE,	WALL TRACK		
8	91354-045	22	CLAMP,	SQUEEZE		
1		23	TUBING, CPR.	1/4 OD X .162" LG.		
2	45407-091	24	ELL, COMP.	1/4 NPT X 1/4 ODT		
1	150828-475	25	VALVE, SAFETY	1/2" NPT		
1	146655-117	26	DIAGRAM,	WIRING - REF. DWG.		
1	136807-916	27	CABLE,	INTERFACE		
		28	REF. PRINT	INSTALL.-146655-115		
14	18538-091	29	NUT, WIRE			
6	84104-001	30	TIE, WIRE			
3	129326-001	31	MOUNT	HARNESS		
1	129361-125	32	EQUIP. MANUAL	MEDALLION		
1	836-042	33	BUSHING, RED.	3/4"NPT X 1/2"NPT		
1	93910-145	34	WIRING	DISPOSER - REF. DWG.		
1	44500-091	35	ELL, 90°	SOLDER JOINT FITTING		
1	150822-588	36	LENS, AERATING			
3	150778-001	37	VARISTOR			130V
1	150777-001	38	CAPACITOR			0.1 MFD, 500V.
1	150828-262	39	VALVE, CHECK			
1	45589-091	40	COUPLING	1/4 NPT		
1	90331-091	41	CONN. STR	3/8		
1	24748-091	42	BUSHING	3/8		
20	129361-897	43	CONTACT, PIN	24-20 AWG		
4	129362-146	44	WASHER, K.O.	1"-1/2"		
1	939-091	45	RED BUSHING	1/8 NPT X 1/4 NPT		
1	76053-091	46	RED BUSHING	1/4 NPT X 1/2 NPT		
1	90525-091	47	GAUGE	1/8 NPT		
1	129356-508	48	TEE, SOLDER	7/8 ODT X 7/8 ODT X 1/2 NPT		
1	93910-642	49	VALVE, BALL	7/8 ODT		
1	764317-524	50	TAPE, TEFLON			
2	83866-001	51	SWITCH, VACUUM			
4	12529-061	52	SCREW, RD HD	#6-32 X 1/4" LG		
2	49087-044	53	BUTTON, PLUG			
2	129361-131	54	COVER, BOX			
2	129361-132	55	BOX, VAC. SW			
2	28899-091	56	NIPPLE, PIPE	1/8 NPT X 1" LG.		
1	93910-118	57	LABEL	PHASE INDICATOR		
1		58	TUBING	1/2 ODT X 4'-0" (SEE NOTE 6)		
1	136807-655	59	CABLE	MOTOR STARTER		
2	29380-091	60	NIPPLE	1 NPT X 1 1/4"LG		
1	82702-001	61	ELL, S.O.	1 NPT		
1	6208-091	62	BUSHING, RED	1 NPT X 3/8 NPT		
1	81062-001	63	ELL, COMP	3/8 NPT X 1/2 ODT		
1	93910-644	64	BRACKET	PIPE SUPPORT		
3	150475-978	65	QUICK DISC'T.	.110 X .020 TAB (NOT SHOWN)		
1	93910-653	66	TRAP, WATER			
1	22472-091	67	RED BUSHING	3/4 NPT X 1/4 NPT		
1	34218-091	68	FITTING, STR.	1/4 ODT X 1/4 NPT		
1	129362-980	69	GUIDELINES, DISP.			
1	146657-254	70	SCHEMATIC			
1	150822-048	71	VALVE, BALL			
1	28917-091	72	NIPPLE, BRASS			

TOLERANCE STANDARD UNLESS OTHERWISE NOTED	FRACTIONAL ±1/64 ANGULAR ±1/2°	DECIMAL ±.005 MACH. SURF. 125
3	02-12-90	PA#105
2	3-89	PA #87
1	6-20-89	PA #32
0	6-8-89	PER 22

6	10-23-90	900200			
6	10-23-90	RA#182			
5	07-17-90	RA#154			
4	04-09-90	RA 113	8	03-09-92	920052
			7	11-15-91	910211

AMERICAN STEBLINER COMPANY
ERIE, PENNSYLVANIA

TITLE: EO DISPOSER KIT
MEDIUM MEDALLION

FIRST MADE FOR:

DWG. NO. 146655-115

CAD DWG.

A- 9

A- 10

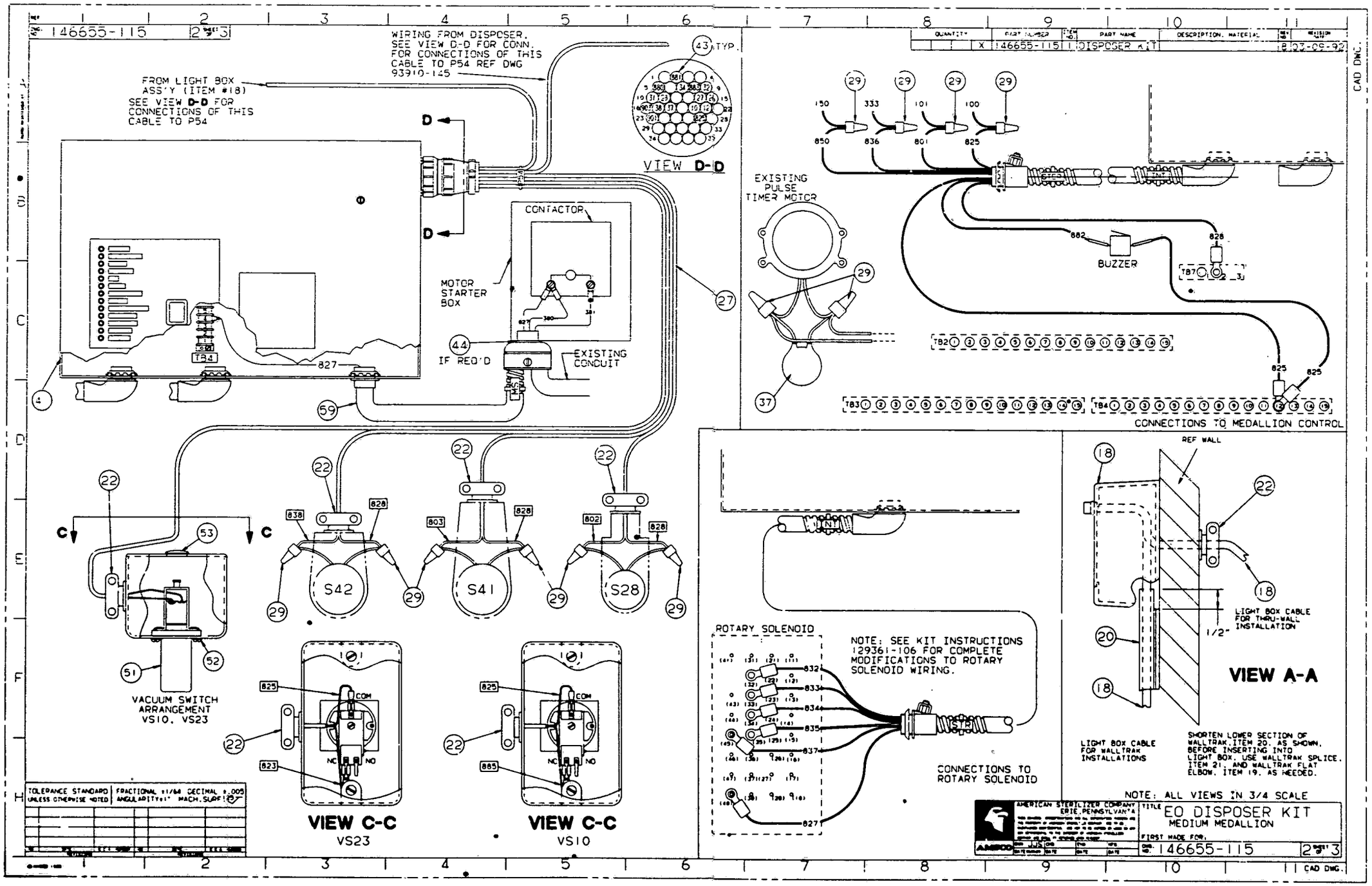
146655-115
WIRING FROM DISPOSER. SEE VIEW D-D FOR CONN. FOR CONNECTIONS OF THIS CABLE TO P54 REF DWG 93910-145
FROM LIGHT BOX ASS'Y (ITEM #18)
SEE VIEW D-D FOR CONNECTIONS OF THIS CABLE TO P54
VIEW D-D
CONTACTOR
MOTOR STARTER BOX
IF REQ'D
EXISTING CONDUIT
EXISTING PULSE TIMER MOTOR
BUZZER
CONNECTIONS TO MEDALLION CONTROL
VACUUM SWITCH ARRANGEMENT VS10, VS23
VIEW C-C
VS23
VIEW C-C
VS10
ROTARY SOLENOID
NOTE: SEE KIT INSTRUCTIONS 129361-106 FOR COMPLETE MODIFICATIONS TO ROTARY SOLENOID WIRING.
CONNECTIONS TO ROTARY SOLENOID
REF WALL
LIGHT BOX CABLE FOR THRU-WALL INSTALLATION
VIEW A-A
LIGHT BOX CABLE FOR WALLTRAK INSTALLATIONS
SHORTEN LOWER SECTION OF WALLTRAK, ITEM 20, AS SHOWN, BEFORE INSERTING INTO LIGHT BOX. USE WALLTRAK SPLICE, ITEM 21, AND WALLTRAK FLAT ELBOW, ITEM 19, AS NEEDED.
NOTE: ALL VIEWS IN 3/4 SCALE
AMERICAN STERILIZER COMPANY ERIE, PENNSYLVANIA
EO DISPOSER KIT
MEDIUM MEDALLION
146655-115
CAD DWG.

DWG. NO. 146655-115 SHEET 3 OF 3

QUANTITY	PART NUMBER	ITEM NO.	PART NAME	DESCRIPTION, MATERIAL	REV NO.	REVISION DATE
1 X	146655-115	1	EO DISPOSER KIT		8	03-09-92

CAD DWG.

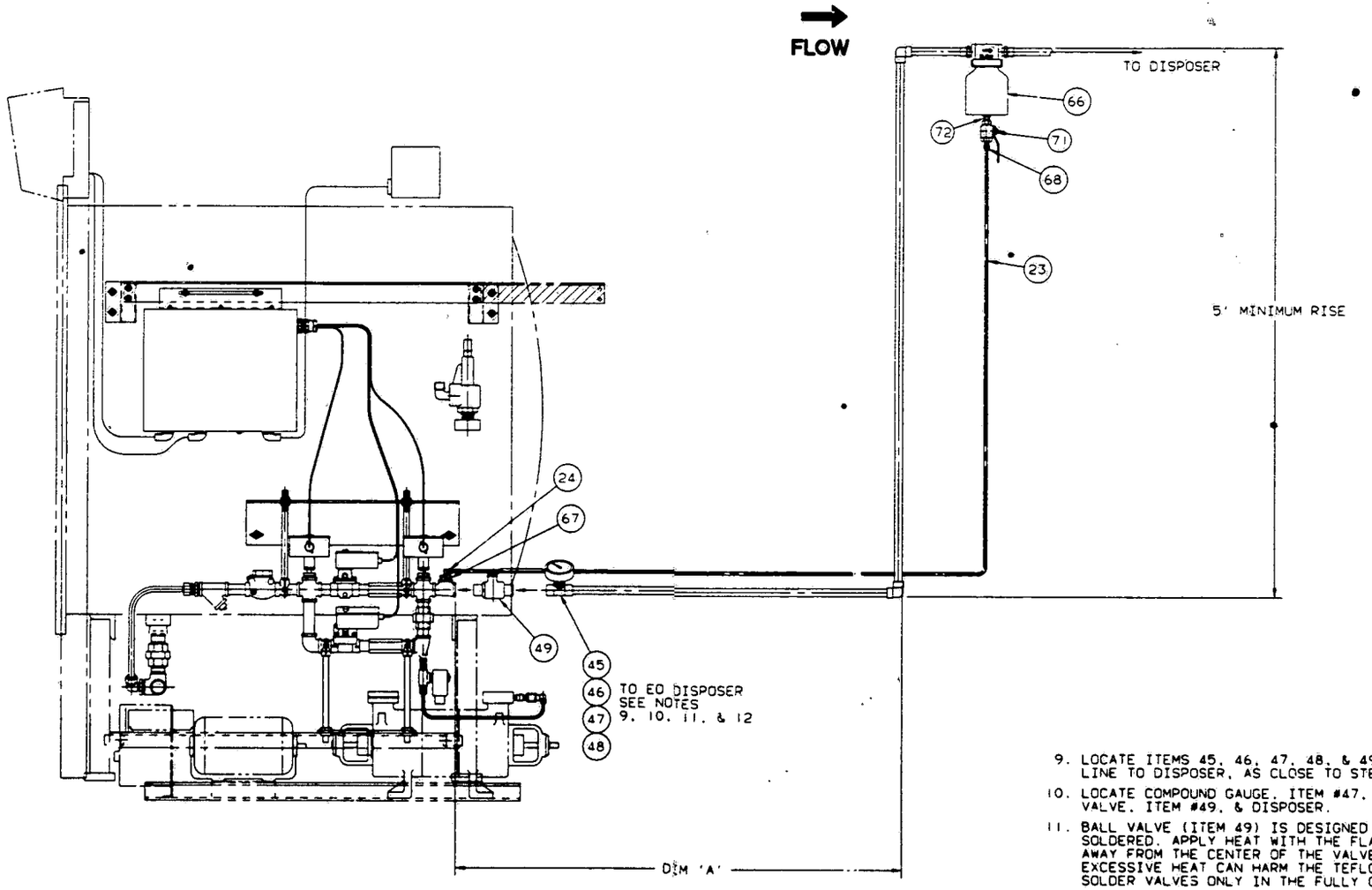

9. LOCATE ITEMS 45, 46, 47, 48, & 49, IN 3/4" EXHAUST LINE TO DISPOSER, AS CLOSE TO STERILIZER AS POSSIBLE.
10. LOCATE COMPOUND GAUGE, ITEM #47, BETWEEN BALL VALVE, ITEM #49, & DISPOSER.
11. BALL VALVE (ITEM 49) IS DESIGNED TO BE SOFT SOLDERED. APPLY HEAT WITH THE FLAME DIRECTED AWAY FROM THE CENTER OF THE VALVE BODY. EXCESSIVE HEAT CAN HARM THE TEFLON SEATS. SOLDER VALVES ONLY IN THE FULLY CLOSED POSITION.
12. MAKE DIM 'A' AS SHORT AS POSSIBLE TO REDUCE WATER FORMATION. SLOPE LINE TOWARDS STERILIZER.

TOLERANCE STANDARD UNLESS OTHERWISE NOTED | FRACTIONAL ±1/64 DECIMAL ±.005 ANGULARITY ±1° MACH. SURF. 125

AMSCO — AMERICAN STERILIZER COMPANY, ERIE, PENNSYLVANIA

TITLE: EO DISPOSER KIT
MEDIUM MEDALLION

FIRST MADE FOR:

DWG. NO. 146655-115 SHEET 3 OF 3

CAD DWG.

DWG NO. 136807-660 | SHEET 1 OF 1

QUANTITY	PART NUMBER	ITEM NO.	PART NAME	DESCRIPTION, MATERIAL	REV NO	REVISION DATE
X	136807-660	1	ASSY., VALVE	MEDIUM MEDALLION	5	11-01-91
2	83228-002	2	VALVE, SOLEN.	3/4"NPT		
1	150822-934	3	VALVE, SOLEN.	1/4"NPT		
1	150828-444	4	VALVE, CHECK	3/4"NPT		
1	129360-765	5	ORIFICE,	FLOW CONT.-3/4"NPT		
1	129361-121	6	ORIFICE,	FLOW CONT.-3/4"NPT		
1	47708-091	7	STRAINER	3/4"NPT		
1	77774-091	8	STRAINER,	NIPPLE - 1/4"NPT		
1	129232-001	9	UNION, PIPE	3/4 NPT		
2	1345-091	10	CROSS, PIPE	3/4"NPT		
2	29291-091	11	NIPPLE, PIPE	3/4"NPT X 1 1/4"LG.		
6	29293-091	12	NIPPLE, PIPE	3/4"NPT X 1 3/4"		
2	29296-091	13	NIPPLE, PIPE	3/4"NPT X 2 1/2"		
1	29302-091	14	NIPPLE, PIPE	3/4"NPT X 4" LG.		
1	91918-091	15	TEE, STR.	3/4"NPT		
1	4920-091	16	TEE, RED.	3/4"X 3/8"X 3/4"		
1	1635-091	17	ELBOW, PIPE	3/4"NPT		
2	11506-091	18	BUSHING, RED.	3/4"NPT X 1/8"NPT		
1	849-091	19	BUSHING, RED.	3/8"NPT X 1/4"NPT		
1	6209-091	20	BUSHING, RED.	3/4 X 3/8		
1	45565-091	21	FITTING, STR.	1/4"ODT X 1/4"NPT		
1	3443-091	22	PLUG, PIPE	3/4"NPT		
4	3439-091	23	PLUG, PIPE	1/8"NPT		
1	13658-091	24	FITTING, COMP.	3/8"NPT X 1/2"ODT		

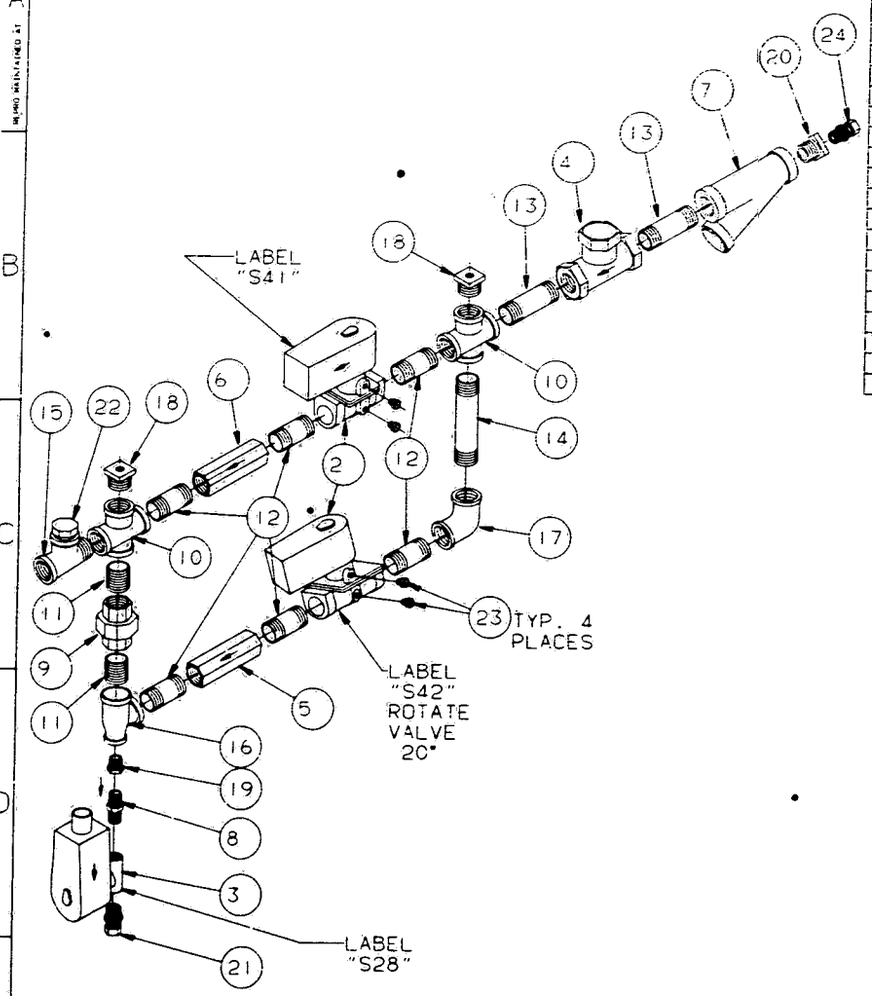

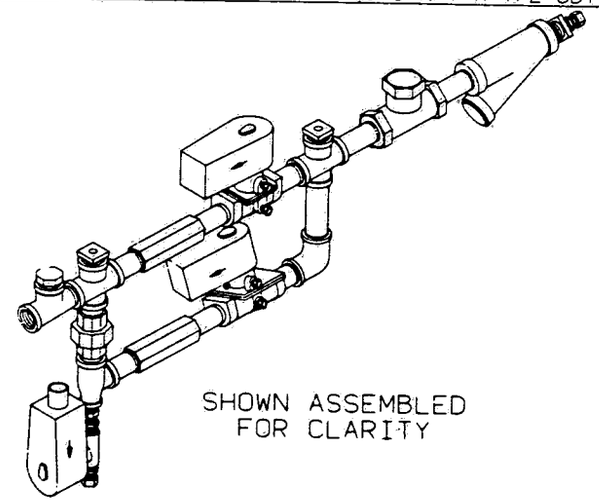

SHOWN ASSEMBLED FOR CLARITY

NOTES:

1. USE PIPE SEALANT ON ALL THREADED JOINTS PER AMSCO DWG. 150822-02
2. LABEL VALVES AS SHOWN USING BRADY MARKERS, OR EQUIVALENT, HAVING BLACK LETTERS ON A YELLOW BACKGROUND.

TOLERANCE STANDARD UNLESS OTHERWISE NOTED | FRACTIONAL ±1/64 DECIMAL ±.005 ANGULARITY±1° MACH. SURF 125

NO	DATE	REVISIONS	I.C.A. NUMBER	NO	DATE	REVISIONS	I.C.A. NUMBER
3	07-19-90	900129					
2	11-14-89	RA #81					
1	09-06-89	RA #56	5	11-01-91	910211		
0	06-08-89	PER #22	4	11-30-90	900213		

AMERICAN STERILIZER COMPANY ERIE, PENNSYLVANIA

THIS DRAWING, SPECIFICATIONS AND ALL INFORMATION THEREON ARE THE PROPERTY OF AMERICAN STERILIZER COMPANY AND TO BE MAINTAINED CONFIDENTIAL. USE NOT TO BE COPIED OR USED IN ANY WAY DETRIMENTAL TO THE INTEREST OF AMERICAN STERILIZER COMPANY AND SHALL BE RETURNED UPON REQUEST.

DWN JJS | CKD JMT-G | ENG MEC | MFG SDN

TITLE ASSEMBLY, VALVE - MEDIUM MEDALLION W/DISPOSER

FIRST MADE FOR: 146655-115

DWG. NO. 136807-660 | SHEET 1 OF 1

CAD DWG.

© AMSCO 1989

B- 1

B- 2

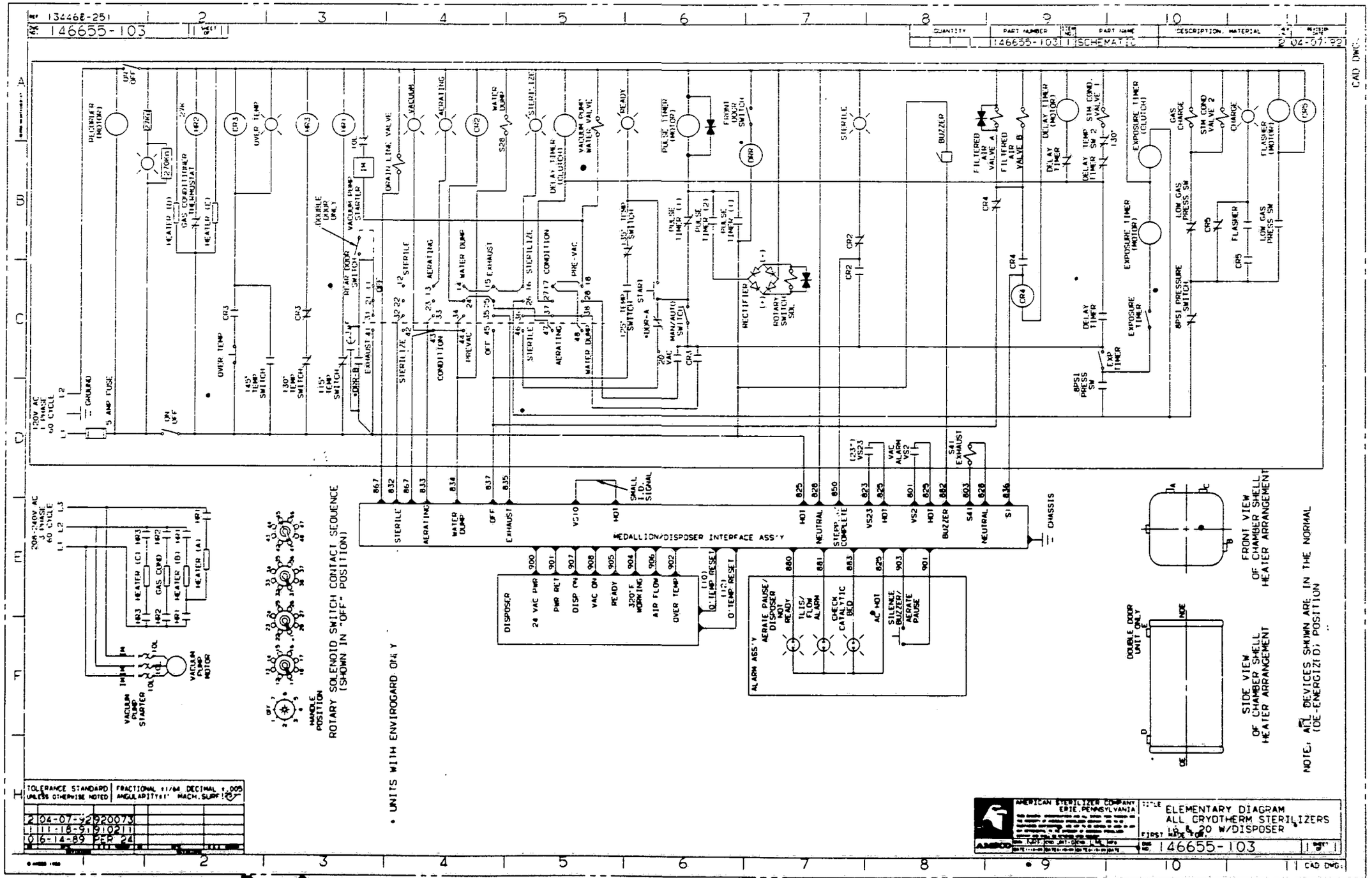
146655-103
ELEMENTARY DIAGRAM
ALL CRYOTHERM STERILIZERS
AMSCO
AMERICAN STERILIZER COMPANY
ERIE, PENNSYLVANIA
MEDALLION/DISPOSER INTERFACE ASS'Y
ROTARY SOLENOID SWITCH CONTACT SEQUENCE
(SHOWN IN "OFF" POSITION)
• UNITS WITH ENVIROGARD ONLY
FRONT VIEW
OF CHAMBER SHELL
HEATER ARRANGEMENT
SIDE VIEW
OF CHAMBER SHELL
HEATER ARRANGEMENT
NOTE: ALL DEVICES SHOWN ARE IN THE NORMAL
(DE-ENERGIZED) POSITION
TOLERANCE STANDARD
UNLESS OTHERWISE NOTED
FRACTIONAL ±1/64 DECIMAL ±.005
ANGULARITY±1° MACH. SURF. 125
2 04-07-92 920073
1 11-18-91 910211
0 6-14-89 PER 24
B- 3
B- 4

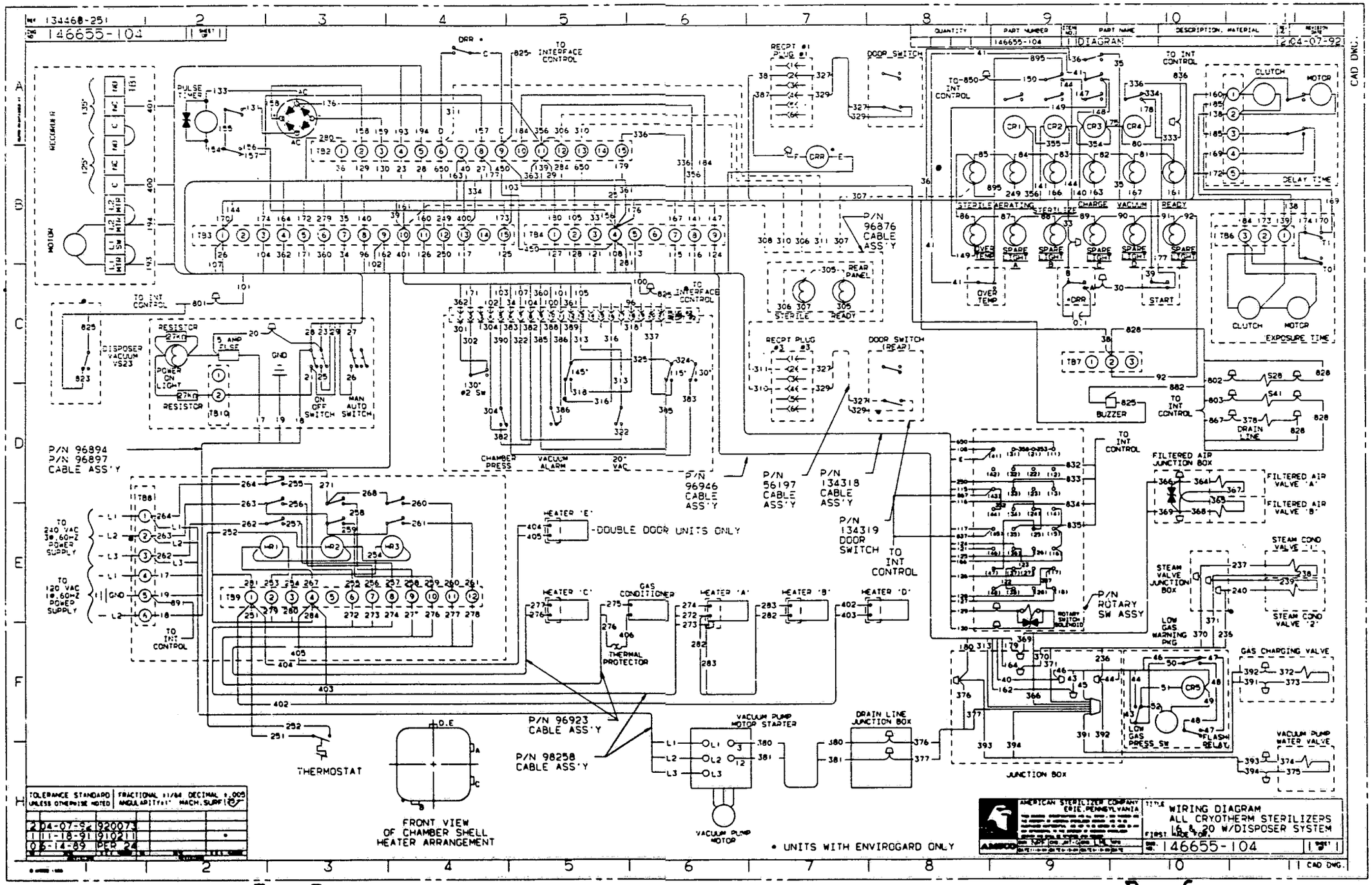
WIRING DIAGRAM
ALL CRYOTHERM STERILIZERS
L6 & 20 W/DISPOSER SYSTEM
146655-104
AMERICAN STERILIZER COMPANY
ERIE, PENNSYLVANIA
P/N 96894
P/N 96897
CABLE ASS'Y
P/N 96876
CABLE ASS'Y
P/N 96946
CABLE ASS'Y
P/N 56197
CABLE ASS'Y
P/N 134318
CABLE ASS'Y
P/N 134319
DOOR SWITCH
P/N ROTARY SW ASSY
P/N 96923
CABLE ASS'Y
P/N 98258
CABLE ASS'Y
DOUBLE DOOR UNITS ONLY
THERMOSTAT
FRONT VIEW
OF CHAMBER SHELL
HEATER ARRANGEMENT
VACUUM PUMP MOTOR STARTER
VACUUM PUMP MOTOR
DRAIN LINE JUNCTION BOX
JUNCTION BOX
FILTERED AIR JUNCTION BOX
FILTERED AIR VALVE 'A'
FILTERED AIR VALVE 'B'
STEAM VALVE JUNCTION BOX
STEAM COND VALVE '1'
STEAM COND VALVE '2'
GAS CHARGING VALVE
VACUUM PUMP WATER VALVE
LOW GAS WARNING PKG
LOW GAS PRESS SW
FLASH RELAY
BUZZER
DRAIN LINE
CLUTCH
MOTOR
DELAY TIME
EXPOSURE TIME
DISPOSER VACUUM VS23
RESISTOR
POWER ON LIGHT
ON OFF SWITCH
MAN AUTO SWITCH
CHAMBER PRESS
VACUUM ALARM
20" VAC
REAR PANEL
STERILE
READY
OVER TEMP
START
TO INT CONTROL
TO INTERFACE CONTROL
TO 240 VAC 3Ø, 60HZ POWER SUPPLY
TO 120 VAC 1Ø, 60HZ POWER SUPPLY
HEATER 'E'
HEATER 'C'
HEATER 'A'
HEATER 'B'
HEATER 'D'
GAS CONDITIONER
THERMAL PROTECTOR
DOOR SWITCH
RECPT #1 PLUG #1
RECPT PLUG #2 #3
DOOR SWITCH (REAR)
• UNITS WITH ENVIROGARD ONLY
TOLERANCE STANDARD UNLESS OTHERWISE NOTED
FRACTIONAL ±1/64 DECIMAL ±.005
ANGULARITY ±1° MACH. SURF
204-07-92 920073
111-18-91 910211
06-14-89 PER 24
CAD DWG.

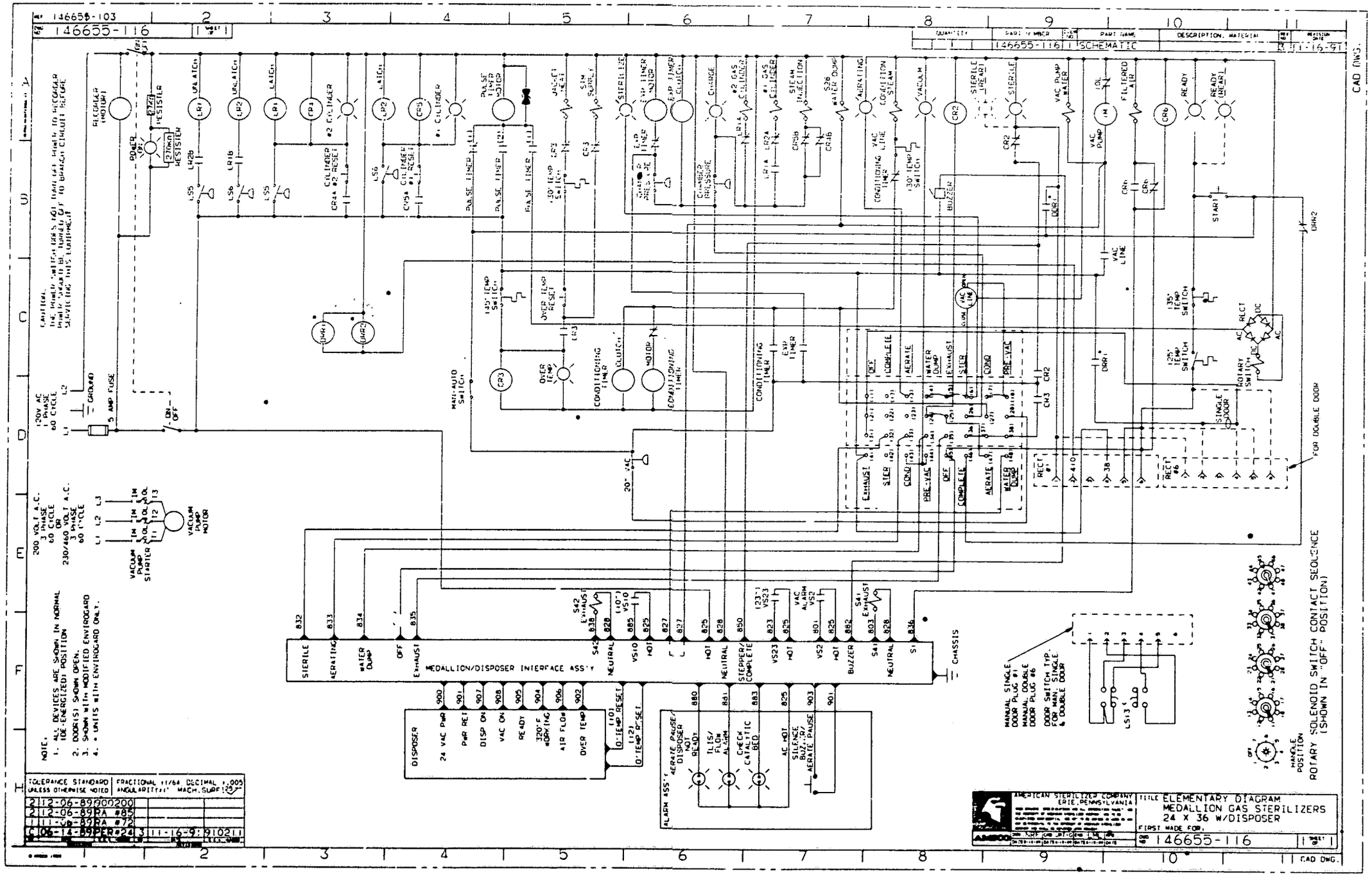
146655-116
SCHEMATIC
11-16-91
CAD DWG.
ELEMENTARY DIAGRAM
MEDALLION GAS STERILIZERS
24 X 36 W/DISPOSER
AMERICAN STERILIZER COMPANY
ERIE, PENNSYLVANIA
FIRST MADE FOR
MEDALLION/DISPOSER INTERFACE ASS'Y
DISPOSER
ALARM ASS'Y
ROTARY SOLENOID SWITCH CONTACT SEQUENCE (SHOWN IN "OFF" POSITION)
MANGLE POSITION
MANUAL SINGLE DOOR PLUG #1
MANUAL DOUBLE DOOR PLUG #6
DOOR SWITCH TYP. FOR MAN. SINGLE & DOUBLE DOOR
FOR DOUBLE DOOR
NOTE.
1. ALL DEVICES ARE SHOWN IN NORMAL (DE-ENERGIZED) POSITION
2. DOOR(S) SHOWN OPEN.
3. SHOWN WITH MODIFIED ENVIROGARD
4. * UNITS WITH ENVIROGARD ONLY.
TOLERANCE STANDARD UNLESS OTHERWISE NOTED
FRACTIONAL ±1/64 DECIMAL ±.005 ANGULARITY±1° MACH. SURF 125
2 12-06-89 00200
2 12-06-89 RA #85
1 11-06-89 RA #72
C 06-14-89 PER #243 11-16-91 910211

B- 7

B- 8

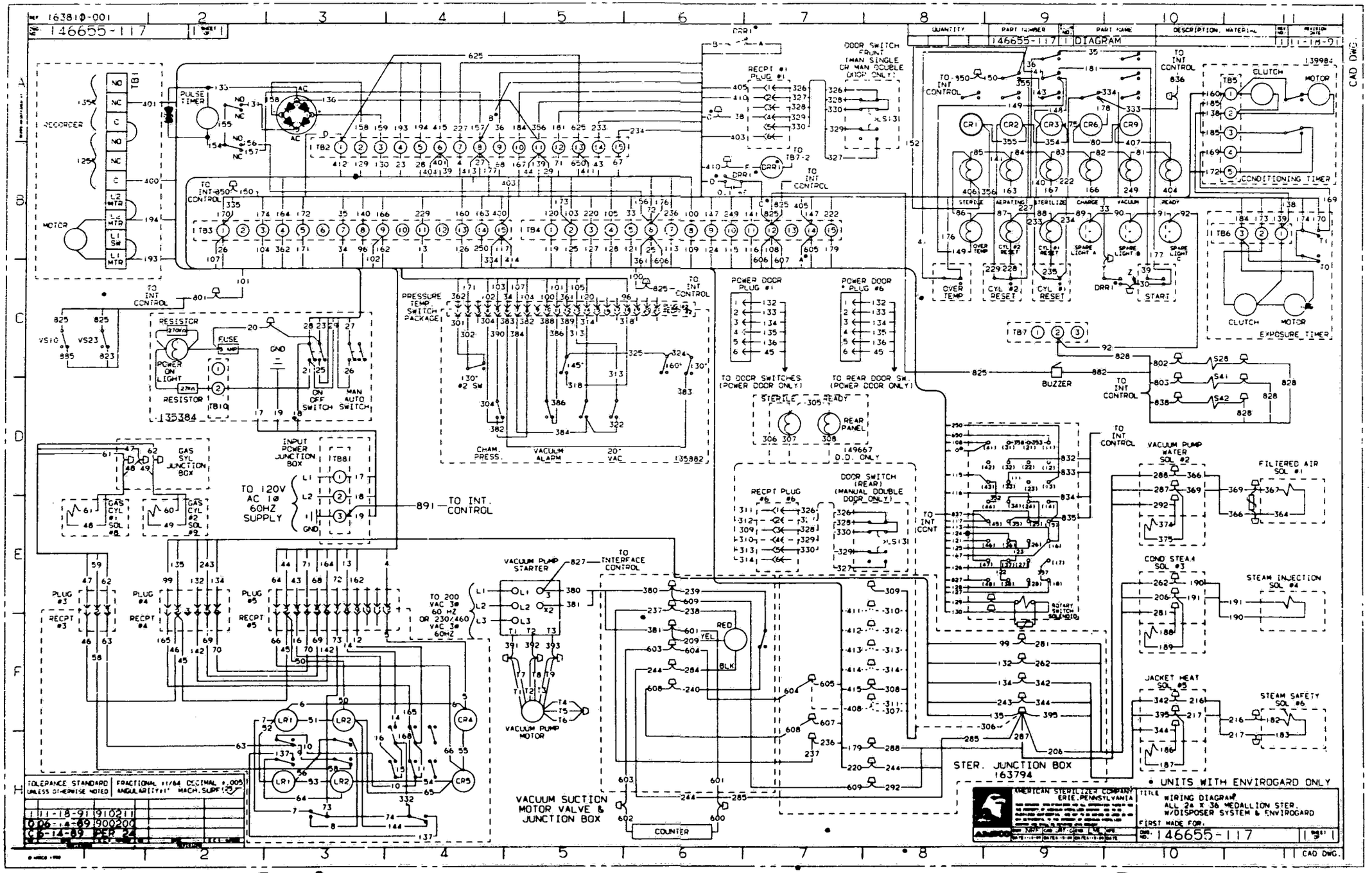
146655-117
DIAGRAM
RECORDER
MOTOR
PULSE TIMER
TO INT CONTROL
DOOR SWITCH FRONT (MAN SINGLE OR MAN DOUBLE DOOR ONLY)
CONDITIONING TIMER
CLUTCH
MOTOR
EXPOSURE TIMER
STERILE
AERATING
STERILIZE
CHARGE
VACUUM
READY
OVER TEMP
CYL #2 RESET
CYL #1 RESET
SPARE LIGHT A
SPARE LIGHT B
SPARE LIGHT C
START
BUZZER
RESISTOR
POWER ON LIGHT
FUSE
GND
ON OFF SWITCH
MAN AUTO SWITCH
PRESSURE TEMP SWITCH PACKAGE
CHAM. PRESS.
VACUUM ALARM
20" VAC
POWER DOOR PLUG #1
POWER DOOR PLUG #6
TO DOOR SWITCHES (POWER DOOR ONLY)
TO REAR DOOR SW. (POWER DOOR ONLY)
REAR PANEL
149667 D.D. ONLY
DOOR SWITCH (REAR) (MANUAL DOUBLE DOOR ONLY)
GAS SYL JUNCTION BOX
GAS CYL #1 SOL #8
GAS CYL #2 SOL #9
INPUT POWER JUNCTION BOX
TO 120V AC 1Ø 60HZ SUPPLY
TO INT. CONTROL
VACUUM PUMP WATER SOL #2
FILTERED AIR SOL #1
COND STEAM SOL #3
STEAM INJECTION SOL #4
JACKET HEAT SOL #5
STEAM SAFETY SOL #6
STER. JUNCTION BOX 163794
VACUUM PUMP STARTER
VACUUM PUMP MOTOR
TO INTERFACE CONTROL
TO 200 VAC 3Ø 60 HZ OR 230/460 VAC 3Ø 60HZ
VACUUM SUCTION MOTOR VALVE & JUNCTION BOX
COUNTER
RECPT #3
RECPT #4
RECPT #5
RECPT #6
PLUG #3
PLUG #4
PLUG #5
PLUG #6
• UNITS WITH ENVIROGARD ONLY
AMERICAN STERILIZER COMPANY ERIE, PENNSYLVANIA
WIRING DIAGRAM ALL 24 X 36 MEDALLION STER. W/DISPOSER SYSTEM & ENVIROGARD
FIRST MADE FOR
146655-117
CAD DWG.

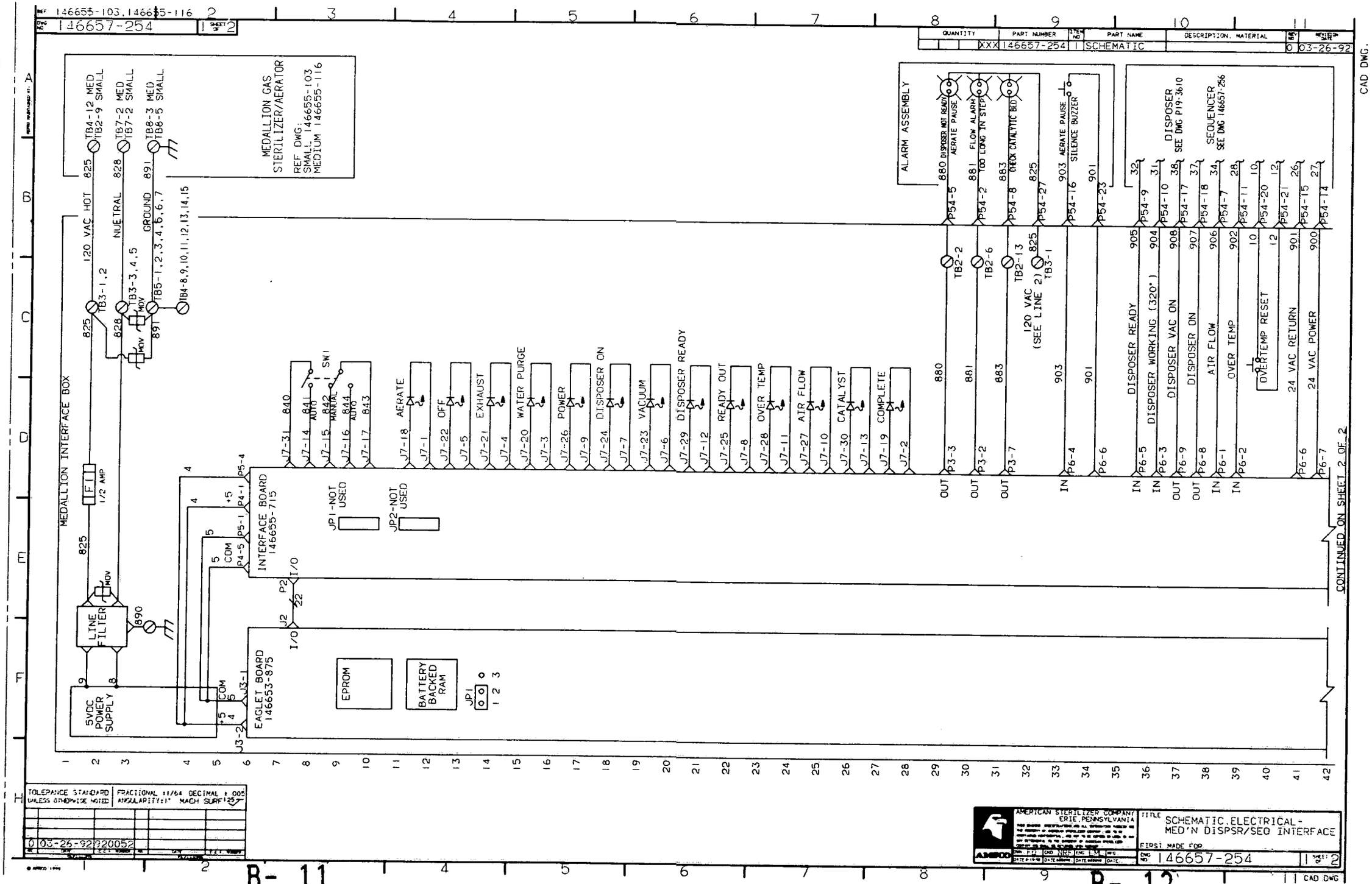
REF 146655-103, 146655-116
146657-254
SHEET 2 OF 2
QUANTITY | PART NUMBER | ITEM NO | PART NAME | DESCRIPTION, MATERIAL | REV NO | REVISION DATE
XXX 146657-254 1 SCHEMATIC 0 03-26-92
CAD DWG.
MEDALLION GAS STERILIZER/AERATOR
REF DWG: SMALL 146655-103 MEDIUM 146655-116
TB4-12 MED TB2-9 SMALL
TB7-2 MED TB7-2 SMALL
TB8-3 MED TB8-5 SMALL
120 VAC HOT 825
NUETRAL 828
GROUND 891
TB3-1,2
TB3-3,4,5
TB5-1,2,3,4,6,6,7
TB4-8,9,10,11,12,13,14,15
MOV
MEDALLION INTERFACE BOX
F1 1/2 AMP
LINE FILTER
890
5VDC POWER SUPPLY
INTERFACE BOARD 146655-715
EAGLET BOARD 146653-875
EPROM
BATTERY BACKED RAM
JP1
JP1-NOT USED
JP2-NOT USED
SW1 AUTO MANUAL AUTO
AERATE
OFF
EXHAUST
WATER PURGE
POWER
DISPOSER ON
VACUUM
DISPOSER READY
READY OUT
OVER TEMP
AIR FLOW
CATALYST
COMPLETE
ALARM ASSEMBLY
880 DISPOSER NOT READY AERATE PAUSE
881 FLOW ALARM TOO LONG IN STEP
883 CHECK CATALYTIC BED
903 AERATE PAUSE SILENCE BUZZER
120 VAC (SEE LINE 2)
DISPOSER SEE DWG P19-3610
SEQUENCER SEE DWG 146657-256
DISPOSER READY
DISPOSER WORKING (320°)
DISPOSER VAC ON
DISPOSER ON
AIR FLOW
OVER TEMP
OVERTEMP RESET
24 VAC RETURN
24 VAC POWER
CONTINUED ON SHEET 2 OF 2
TOLERANCE STANDARD UNLESS OTHERWISE NOTED
FRACTIONAL ±1/64 DECIMAL ±.005 ANGULARITY±1° MACH SURF 125
0 03-26-92 020052
AMERICAN STERILIZER COMPANY ERIE, PENNSYLVANIA
TITLE SCHEMATIC, ELECTRICAL- MED'N DISPSR/SEQ INTERFACE
FIRST MADE FOR
DWG NO. 146657-254
SHEET 2 OF 2
CAD DWG
B- 11
B- 12

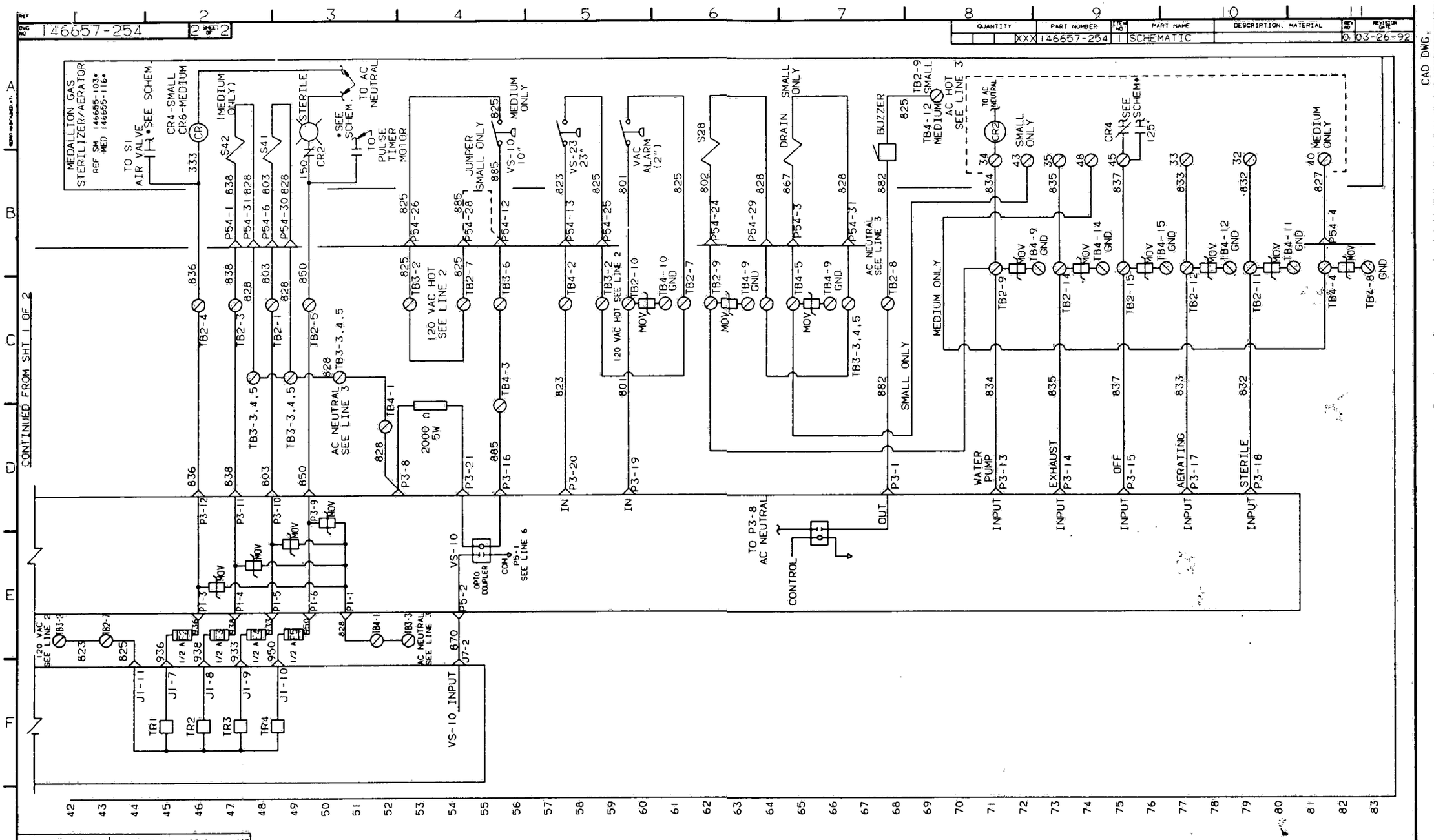
146657-254
2 SHEET OF 2
QUANTITY
PART NUMBER
PART NAME
DESCRIPTION, MATERIAL
XXX 146657-254
SCHEMATIC
03-26-92
MEDALLION GAS STERILIZER/AERATOR
REF SM 146655-103* MED 146655-116*
TO SI AIR VALVE
SEE SCHEM.
CR4-SMALL CR6-MEDIUM
(MEDIUM ONLY)
STERILE
TO AC NEUTRAL
TO PULSE TIMER MOTOR
JUMPER (SMALL ONLY)
MEDIUM ONLY
VS-10 10"
VS-23 23"
VAC ALARM (2")
DRAIN
SMALL ONLY
BUZZER
TB2-9 SMALL
TB4-12 MEDIUM
AC HOT SEE LINE 3
TO AC NEUTRAL
SMALL ONLY
CR4
125"
MEDIUM ONLY
CONTINUED FROM SHT 1 OF 2
120 VAC HOT SEE LINE 2
AC NEUTRAL SEE LINE 3
2000 Ω 5W
120 VAC HOT SEE LINE 2
SMALL ONLY
MEDIUM ONLY
WATER PUMP
EXHAUST
OFF
AERATING
STERILE
INPUT
IN
OUT
TO P3-8 AC NEUTRAL
CONTROL
OPTO COUPLER
COM
P5-1 SEE LINE 6
VS-10
VS-10 INPUT
TR1
TR2
TR3
TR4
TOLERANCE STANDARD UNLESS OTHERWISE NOTED
FRACTIONAL ±1/64 DECIMAL ± .005
ANGULARITY ±1°
AMERICAN STERILIZER COMPANY
ERIE, PENNSYLVANIA
TITLE
SCHEMATIC, ELECTRICAL-
MED'N DISPSR/SEQ INTERFACE
FIRST MADE FOR
146657-254
2 SHEET OF 2
CAD DWG.

DWG. NO. 146655-106 | SHEET 1 OF 2

WIRE #	ITEM & COLOR	LENGTH	FROM	CONN METH	TO	CONN METH
BLK LEAD			AIR FLOW LED	---	P7-10	A
RED LEAD			AIR FLOW LED	---	P7-27	A
BLK LEAD			CATALYST LED	---	P7-13	A
RED LEAD			CATALYST LED	---	P7-30	A
BLK LEAD			DISP. ON LED	---	P7-7	A
RED LEAD			DISP. ON LED	---	P7-24	A
BLK LEAD			DISP. READY LED	---	P7-12	A
RED LEAD			DISP. READY LED	---	P7-29	A
BLK LEAD			OVER TEMP LED	---	P7-11	A
RED LEAD			OVER TEMP LED	---	P7-28	A
BLK LEAD			POWER LED	---	P7-9	A
RED LEAD			POWER LED	---	P7-26	A
BLK LEAD			READY OUT LED	---	P7-8	A
RED LEAD			READY OUT LED	---	P7-25	A
BLK LEAD			VACUUM LED	---	P7-6	A
RED LEAD			VACUUM LED	---	P7-23	A
BLK LEAD			AERATE LED	---	P7-1	A
RED LEAD			AERATE LED	---	P7-18	A
BLK LEAD			COMPLETE LED	---	P7-2	A
RED LEAD			COMPLETE LED	---	P7-19	A
BLK LEAD			EXHAUST LED	---	P7-4	A
RED LEAD			EXHAUST LED	---	P7-21	A
BLK LEAD			OFF LED	---	P7-5	A
RED LEAD			OFF LED	---	P7-22	A
BLK LEAD			WATER PURGE LED	---	P7-3	A
RED LEAD			WATER PURGE LED	---	P7-20	A
4	IT.35 RED	15"	PS +OUT	D	J3-2	F
4	IT.33 RED	20"	PS +OUT	D	P4-1	E
4	IT.33 RED	4"	P5-4	E	P4-1	E
5	IT.36 BLK	15"	PS -OUT	D	J3-1	F
5	IT.34 BLK	20"	PS -OUT	D	P4-5	E
5	IT.34 BLK	4"	P4-5	E	P5-1	E
10	IT.34 BLK	22"	PUSH BUTTON	D	TB1-4	B
12	IT.34 BLK	22"	PUSH BUTTON	D	TB1-5	B
8	IT.38 BLK	10"	LOAD 1	C	PS-1	D
9	IT.37 WHT	10"	LOAD 2	C	PS-4	D
801			CONTROL CABLE	---	TB2-10	B REF
801	IT.34 BLK	6"	TB2-10	B	P3-19	E
803	IT.34 BLK	6"	TB2-1	B	P3-10	E
803	IT.34 BLK		J54-6	H	TB2-1	B
823	IT.34 BLK	9"	TB3-7	B	P3-20	E
823	IT.34 BLK		J54-13	H	TB3-7	B
825			CONTROL CABLE	---	TB3-1	B REF
825	IT.38 BLK	4"	TB3-1	B	F1-A	C
825	IT.38 BLK	10"	F1-B	C	LINE 1	C
825	IT.38 BLK	16"	TB3-1	B	TB2-7	B
825			CONTROL CABLE	---	TB3-2	B REF
825	IT.36 BLK	14"	TB3-2	B	J1-11	F
828			CONTROL CABLE	---	TB3-3	B REF
828	IT.37 WHT	5"	P1-1	B	P3-8	E
828	IT.37 WHT	8"	TB3-3	B	LINE 2	C
828	IT.39 WHT	12"	TB3-4	B	P1-1	E
832			ROTARY CABLE	---	TB2-11	B REF
832	IT.34 BLK	6"	TB2-11	B	P3-18	E
833			ROTARY CABLE	---	TB2-12	B REF
833	IT.34 BLK	6"	TB2-12	B	P3-17	E
834			ROTARY CABLE	---	TB2-9	B REF
834	IT.34 BLK	6"	TB2-7	B	P3-13	E
835			ROTARY CABLE	---	TB2-14	B REF
835	IT.34 BLK	6"	TB2-14	B	P3-14	E
836			ROTARY CABLE	---	TB2-4	B REF
836	IT.34 BLK	6"	TB2-4	B	P3-12	E
837			ROTARY CABLE	---	TB2-15	B REF
837	IT.34 BLK	6"	TB2-15	B	P3-15	E
838			CONTROL CABLE	---	TB2-3	B REF
838	IT.34 BLK	6"	TB2-3	B	P3-11	E
838	IT.34 BLK		J54-1	H	TB2-3	B
840	IT.34 BLK	12"	P7-31	A	SW1-2	C
841	IT.34 BLK	12"	P7-14	A	SW1-3	C
842	IT.34 BLK	12"	P7-15	A	SW1-4	C
843	IT.34 BLK	12"	P7-17	A	SW1-5	C
844	IT.34 BLK	12"	P7-16	A	SW1-6	C

WIRE #	ITEM & COLOR	LENGTH	FROM	CONN METH	TO	CONN METH
850			CONTROL CABLE	---	TB2-5	B REF
850	IT.34 BLK	5"	TB2-5	B	P3-9	E
867			ROTARY CABLE	---	TB3-5	B REF
867	IT.34 BLK		J54-3	H	TB3-5	B
870	IT.36 BLK	8"	J7-2	F	[illegible]	E
880	IT.34 BLK	6"	TB2-2	B	P3-3	E
880	IT.34 BLK		J54-5	H	TB2-2	B
881	IT.34 BLK	8"	TB2-6	B	P3-2	E
881	IT.34 BLK		J54-2	H	TB2-6	B
882			CONTROL CABLE		TB2-4	B
882	IT.34 BLK	8"	[illegible]	B	[illegible]	E
883	IT.34 BLK	[illegible]	[illegible]	B	[illegible]	E
883	IT.34 BLK		J54-8	H	[illegible]	B
885	IT.34 BLK	[illegible]	TB3-6	B	P3-6	E
885	IT.34 BLK		J54-12	H	TB3-6	B
890	IT.40 GRN	8"	J54-9	H	SCR	B
900	IT.34 BLK	8"	P6-7	E	TB1-1	B
900	IT.34 BLK		J54-14	H	TB1-1	B
901	IT.34 BLK	8"	P6-6	E	TB1-2	B
901	IT.34 BLK	10"	J54-5	H	TB1-12	B
902	IT.34 BLK	8"	P6-2	E	TB1-13	B
902	IT.34 BLK		J54-[illegible]	H	TB1-13	B
903	IT.34 BLK	8"	P6-4	E	TB1-[illegible]	B
903	IT.34 BLK		J54-6	H	TB1-[illegible]	B
904	IT.34 BLK	8"	P6-3	E	TB1-[illegible]	B
904	IT.34 BLK		J54-10	H	TB1-[illegible]	B
905	IT.34 BLK	8"	P6-5	E	TB1-10	B
905	IT.34 BLK	10"	J54-[illegible]	H	TB1-[illegible]	B
906	IT.34 BLK	8"	P6	E	TB1-7	B
906	IT.34 BLK	10"	J54-7	H	TB1-7	B
907	IT.34 BLK	8"	P6-8	E	TB1-[illegible]	B
907	IT.34 BLK	10"	J54-[illegible]	H	TB1-[illegible]	B
908	IT.34 BLK	8"	P6-9	E	TB1-[illegible]	B
908	IT.34 BLK	10"	J54-[illegible]	H	TB1-[illegible]	B
933	IT.36 BLK	8"	J1-[illegible]	F	F2-A	C
933	IT.34 BLK	6"	F2-B	C	P3-5	E
936	IT.36 BLK	8"	J1-[illegible]	F	F2-A	C
936	IT.34 BLK	6"	F2-B	C	P3-[illegible]	E
938	IT.36 BLK	8"	J1-[illegible]	F	F3-A	C
938	IT.34 BLK	6"	F3-B	C	P3-[illegible]	E
950	IT.36 BLK	8"	J1-[illegible]	F	F5-A	C
950	IT.34 BLK	6"	F5-B	C	P3-16	E
JUMPER	IT.38 BLK	2"	PS-4	D	PS-2	D
JUMPER	IT.38 BLK	2"	PS-3	D	PS	D

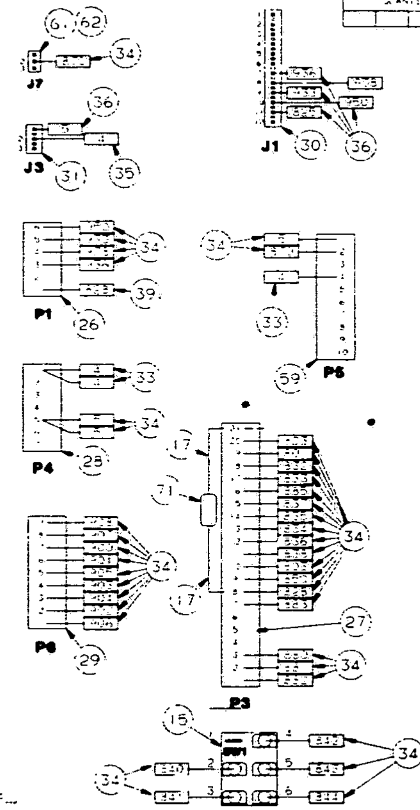

VIEW D-D
SCALE 1:1

NOTES:

1. WIRE #22 GA STRANDED COPPER, 19/34 STRANDING, TEFLON INSULATION, U.L. (STYLE 1213, 300 VOLT, 105°C) AND CSA (APPLIANCE WIRE, [illegible] INSULATION, 150 VOLT, 150°C) LABELS REQ'D
2. WIRE #22 GA STRANDED COPPER, 7/30 STRANDING, 300V, 80°C, PVC INSULATION.
3. WIRE 18 GA STRANDED COPPER, 16/30 STRANDING, 600V, 105°C, THERMOPLASTIC INSULATION.
4. CONNECTION METHOD "A", ITEM #41, STRIP 3/16
   CONNECTION METHOD "B", ITEM #42, STRIP 1/4"
   CONNECTION METHOD "C", ITEM #43, STRIP 1/4"
   CONNECTION METHOD "D", SOLDER - STRIP 1/4" AND TIN, SEE NOTE #7
   CONNECTION METHOD "E", STRIP 5/16" AND TIN
   CONNECTION METHOD "F", NO STRIP
   CONNECTION METHOD "G", ITEM #44, STRIP 5/16"
   CONNECTION METHOD "H", ITEM #70, STRIP 5/16"
5. CAREFULLY APPLY COVER LABEL, ITEM #25, BEFORE WIRING SWITCH, ITEM #15, AND LED LIGHTS, ITEM #14.
6. BLACK INSULATION SLEEVING, BRAIDED GLASS FIBER/VINYL COVERED NEMA VS-1, GRADE B, SIZE 14 (.064/.072 ID).
7. ALL SOLDER MATERIAL SHALL BE IN ACCORDANCE WITH AMSCO DWG. 52595.
8. LABEL COMPONENTS AS SHOWN WITH BRADY TYPE MARKERS, BLACK LETTERS ON YELLOW BACKGROUND.
9. LABEL WIRES 4" LONG OR LESS ONCE IN CENTER. LABEL LONGER WIRES 1" FROM EACH END USING BRADY TYPE MARKERS, BLACK LETTERS ON WHITE BACKGROUND.
10. PLACE TIE WRAPS, ITEM #47, WHERE NECESSARY TO MAINTAIN A NEAT ASS'Y.
11. DO NOT TIE WRAP WIRES #4 & #5 TO ANY OTHER WIRING. TIE WRAP THEM TOGETHER AND USE HARNESS MOUNTS, ITEM 46, TO SECURE TO BOX.
12. TIE WRAP WIRE 900 THRU 908 AS A GROUP BETWEEN TB1 AND P6.
13. DRESS WIRE AWAY FROM RESISTOR, ITEM #71.
14. PULL EXCESS WIRE LENGTH, IF ANY, OF CABLE ASSEMBLIES, ITEMS 23 & 24, OUT OF BOX PRIOR TO TIE-WRAPPING.
15. DRESS WIRES AWAY FROM ALL FUSES. FUSE ACCESS MUST NOT BE OBSCURED
16. SCRAPE PAINT AWAY FROM BOX OUTER SURFACE BEFORE MOUNTING SCREW.
17. TWIST WIRES 4 & 5 FROM POWER SUPPLY TO EAGLET J3 PLUG.
18. TWIST WIRES 4 & 5 FROM POWER SUPPLY TO PLUG P4.
19. SHUNTS FOR JUMPERS JP1 & JP2 ON INTERFACE BOARD, ITEM 7, MAY BE IN EITHER POSITION.
20. SHUNT FOR JUMPER JP1 ON EAGLET BOARD, ITEM 8, MUST BE IN "WDOG" POSITION.

QUANTITY	PART NUMBER	ITEM NO	PART NAME	DESCRIPTION, MATERIAL
X	146655-106	1	INTERFACE BOX	MEDALLION
1	146655-110	2	BOX MODIFICATION	
1	93910-110	3	BRACKET, MOUNTING	
1	93821-001	4	LINE FILTER	
1	93909-994	5	POWER SUPPLY	5V
1	129361-113	6	SWITCH, RESET	
1	146655-715	7	PC BOARD ASS'Y	DISPOSER INTERFACE
1	146653-875	8	PC BOARD ASS'Y	EAGLET II
2	93902-847	9	TERMINAL BOARD	15 POS. TB1, TB2
1	93902-900	10	TERMINAL BOARD	7 POS. TB3
1	93908-525	11	FUSEBLOCK	3 POS. F2, F3, F4
2	150822-678	12	FUSEBLOCK	SINGLE F1, F5
5	20341-091	13	FUSE	0.5A 250V. F1,F2,F3,F4,F5
13	129361-013	14	LED, SNAP-IN	
1	93909-993	15	SWITCH, ROCKER	AUTO/MAN SW1
1	150778-001	16	VARISTOR	
1		17	VINYL INSUL TUBE	1/16 X 5 1/4" LG. SEE NOTE #6
2	84123-001	18	BAR, JUMPER	
4	150475-928	19	STAND-OFF	#8-32 X 7/8" LG.
4	129361-680	20	STAND-OFF, M/F	#6-32 X 7/16 LG.
4	129361-082	21	STAND-OFF M/F	#6-32 X 1 3/4" LG.
1	93910-097	22	CABLE ASS'Y.	J2/P2
1	136807-651	23	CABLE ASS'Y.	CONTROL BOX
1	136807-653	24	CABLE ASS'Y.	ROTARY SOLENOID
1	93910-112	25	LABEL	LED/SWITCH ID SEE NOTE #5
1	129361-019	26	PLUG, 6 POS.	P1
1	129361-023	27	PLUG, 21 POS.	P3
1	129361-020	28	PLUG, 7 POS.	P4
1	129361-021	29	PLUG, 9 POS.	P6
1	129361-086	30	PLUG, 12 POS.	J1
1	129361-085	31	PLUG, 3 POS.	J3
1	56396-486	32	PLUG, 34 POS.	P7
1		33	WIRE, RED	2'2" LG. SEE NOTE #1
1		34	WIRE, BLACK	34'7" LG. SEE NOTE #1
1		35	WIRE, RED	1'3" LG. SEE NOTE #2
1		36	WIRE, BLACK	6'1" LG. SEE NOTE #2
1		37	WIRE, WHITE	4'3" LG. SEE NOTE #3
1		38	WIRE, BLACK	4'7" LG. SEE NOTE #3
1		39	WIRE, WHITE	2'6" LG. SEE NOTE #1
1		40	WIRE, GREEN	8" LG. SEE NOTE #3
31	150822-810	41	CONTACT, SOCKET	.025 SQ POST 24/20 AWG
55	129359-024	42	REC., FAST-ON	.020 X .187 TAB 22/18 AWG
21	150476-410	43	REC., FAST-ON	.032 X .250 TAB 22/18 AWG
		44		
2	32118-091	45	ADAPTER, QK DISC	
8	129326-001	46	HARNESS MOUNT	
12	84104-001	47	TIE WRAP	SEE NOTE #10
22	93908-039	48	SCREW, SEMS	#6-32 X 3/8" LG
4	93908-033	49	SCREW, SEMS	#6-32 X 1/4" LG
2	93908-037	50	SCREW, SEMS	#8-32 X 1/2" LG
6	129359-531	51	NUT, KEPS	#8-32
4	93908-036	52	SCREW, SEMS	#10-32 X 3/8" LG
4	129359-532	53	NUT, KEPS	#10-32
4	129266-001	54	TUBING, HYSHRINK	
5	78629-091	55	TUBING, HYSHRINK	
5	92615-001	56	LABEL	1/2 AMP F1,F2,F3,F4,F5
3	50527-061	57	SCREW, SOCKET HD	#8-32 X 1/2" LG.
3	17796-091	58	WASHER, FLAT	.203 ID X .438 OD X .031 THK.
1	129361-022	59	PLUG, 10 POS	P5
1	93910-116	60	PROGRAMMED EPROM	U4
1	129361-108	61	CONTACT, RECEPTACLE	J7
1	129361-109	62	HOUSING, RECEPTACLE	
1	93910-137	63	BRACKET, SWITCH	
12	84121-002	64	NUT, KEPS	#6-32
1	150822-003	65	MARKER, TIE	
8	27642-042	66	SCREW, RD. HD.	#8-32 X 3/8" LG.
8	19676-041	67	LOCKWASHER	#8
1	129359-025	68	LABEL	
1	93443-006	69	RECEPTACLE.	P54
19	129262-004	70	SOCKET, CONTACT	
1	129362-409	71	RESISTOR	2000 Ω, 5W

REV 4 | 04-19-91

CAD DWG.

TOLERANCE STANDARD UNLESS OTHERWISE NOTED | FRACTIONAL ±1/64 DECIMAL ±.005 ANGULARITY ±1° MACH. SURF. 125

3	07-17-90	RA#151			
2	04-24-90	RA 119			
1	5-09-89	RA#12	4	04-19-91	910084
0	4-28-89	PER #2	3	07-17-90	900200

AMERICAN STERILIZER COMPANY
ERIE, PENNSYLVANIA

TITLE INTERFACE BOX ASS'Y. MEDALLION

FIRST MADE FOR: 146655-109, 146655-115

DWG. NO. 146655-106 | SHEET 1 OF 2

CAD DWG.

C- 1

C- 2

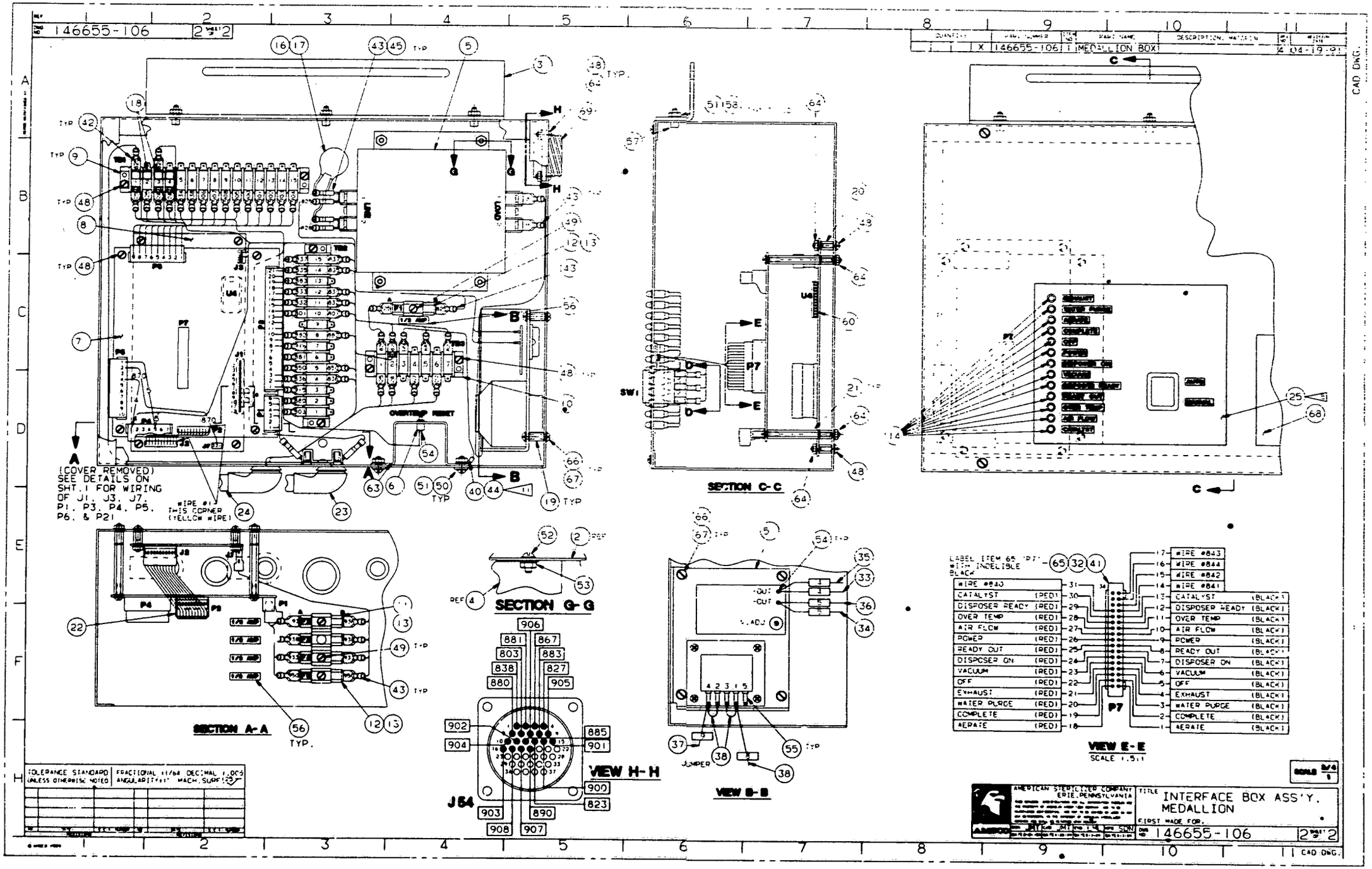
146655-106
2 SHT 2
QUANTITY | PART NUMBER | PART NAME | DESCRIPTION, MATERIAL
X | 146655-106 | 1 | MEDALLION BOX
04-19-91
CAD DWG.
(COVER REMOVED)
SEE DETAILS ON
SHT.1 FOR WIRING
OF J1, J3, J7,
P1, P3, P4, P5,
P6, & P21
WIRE #1
THIS CORNER
(YELLOW WIRE)
OVERTEMP RESET
SECTION A-A
SECTION G-G
SECTION C-C
VIEW H-H
J54
VIEW B-B
JUMPER
VIEW E-E
SCALE 1.5:1
LABEL ITEM 65 'P7' WITH INDELIBLE BLACK
WIRE #840
CATALYST (RED)
DISPOSER READY (RED)
OVER TEMP (RED)
AIR FLOW (RED)
POWER (RED)
READY OUT (RED)
DISPOSER ON (RED)
VACUUM (RED)
OFF (RED)
EXHAUST (RED)
WATER PURGE (RED)
COMPLETE (RED)
AERATE (RED)
WIRE #843
WIRE #844
WIRE #842
WIRE #841
CATALYST (BLACK)
DISPOSER READY (BLACK)
OVER TEMP (BLACK)
AIR FLOW (BLACK)
POWER (BLACK)
READY OUT (BLACK)
DISPOSER ON (BLACK)
VACUUM (BLACK)
OFF (BLACK)
EXHAUST (BLACK)
WATER PURGE (BLACK)
COMPLETE (BLACK)
AERATE (BLACK)
TOLERANCE STANDARD UNLESS OTHERWISE NOTED
AMERICAN STERILIZER COMPANY
ERIE, PENNSYLVANIA
TITLE
INTERFACE BOX ASS'Y.
MEDALLION
FIRST MADE FOR
146655-106
2 SHT 2
CAD DWG.

146655-106

146655-718 1 OF 3

NOTES:

1. WIRE #22 GA STRANDED COPPER, 19/34 STRANDING, TEFLON INSULATION, U.L. (STYLE 1213, 300 VOLT, 105°C) AND CSA (APPLIANCE WIRE, .010 THK INSULATION, 150 VOLT, 150°C) LABELS REQ'D.
2. WIRE #22 GA STRANDED COPPER, 7/30 STRANDING, 300V, 80°C, PVC INSULATION.
3. WIRE 18 GA STRANDED COPPER, 16/30 STRANDING, 600V, 105°C, THERMOPLASTIC INSULATION.
4. CONNECTION METHOD "A", ITEM #41, STRIP 3/16"
   CONNECTION METHOD "B", ITEM #42, STRIP 1/4"
   CONNECTION METHOD "C", ITEM #43, STRIP 1/4"
   CONNECTION METHOD "D", SOLDER - STRIP 1/4" AND TIN, SEE NOTE #7.
   CONNECTION METHOD "E", STRIP 5/16" AND TIN
   CONNECTION METHOD "F", NO STRIP
   CONNECTION METHOD "G", ITEM #44, STRIP 1/4"
5. CAREFULLY APPLY COVER LABEL, ITEM #25, BEFORE WIRING SWITCH, ITEM #15, AND LT. LIGHTS, ITEM #14.
6. BLACK INSULATION SLEEVING, BRAIDED GLASS FIBER/VINYL COVERED NEMA VS-1, GRADE B, SIZE 14 (.064/.072 ID).
7. ALL SOLDER MATERIAL SHALL BE IN ACCORDANCE WITH AMSCO DWG. 52595.
8. LABEL COMPONENTS AS SHOWN WITH BRADY TYPE MARKERS, BLACK LETTERS ON YELLOW BACKGROUND, OR EQUIVALENT. LABELS REQ'D: TB2, TB3, TB4, TB5, OVERTEMP RESET, J54.
9. LABEL WIRES 4" LONG OR LESS ONCE IN CENTER. LABEL LONGER WIRES 1" FROM EACH END USING BRADY TYPE MARKERS, BLACK LETTERS ON WHITE BACKGROUND.
10. PLACE TIE WRAPS, ITEM #47, WHERE NECESSARY TO MAINTAIN A NEAT ASS'Y.
11. DO NOT TIE WRAP WIRES #4 & #5 TO ANY OTHER WIRING. USE HARNESS MOUNTS, ITEM 46, TO SECURE TO BOX.
12. PULL EXCESS WIRE LENGTH, IF ANY, OF CABLE ASSEMBLIES, ITEMS 23 & 24, OUT OF BOX PRIOR TO TIE-WRAPPING.
13. DRESS WIRES AWAY FROM ALL FUSES. FUSE ACCESS MUST NOT BE OBSTRUCTED.
14. ITEMS 72,73 REFERRED TO AS "GROUND CABLE" IN WIRING CHART.
15. SHUNTS FOR JUMPERS JP1 & JP2 ON INTERFACE BOARD, ITEM 7, MAY BE IN EITHER POSITION.
16. SHUNT FOR JUMPER JP1 ON EAGLET BOARD, ITEM 6, MUST BE IN "WDOG" POSITION.
17. CHART FOR JUMPER BAR ITEM #18

    -TB5-1 TO TB5-2
    -TB5-2 TO TB5-3
    -TB5-3 TO TB5-4
    -TB5-4 TO TB5-5
    -TB5-5 TO TB5-6
    -TB5-6 TO TB5-7
18. APPLY TIE MARKER, ITEM 65, TO UNTERMINATED END OF CONDUIT. LABEL MARKER GROUND.
19. LABEL "OVERTEMP RESET" BELOW PUSHBUTTON ON OUTSIDE OF BOX, PER NOTE 8.
20. LABEL "J54" BELOW CONNECTOR ON OUTSIDE OF BOX, PER NOTE 8.

QUANTITY	PART NUMBER	ITEM NO.	PART NAME	DESCRIPTION, MATERIAL	REV NO. / REVISION DATE
X	146655-718	1	INTERFACE BOX	MEDALLION	2 03-18-92
1	146655-717	2	BOX MODIFICATION		
1	93910-110	3	BRACKET,MOUNTING		
1	93821-001	4	LINE FILTER		
1	146655-719	5	HARNESS ASS'Y	POWER SUPPLY	
1	44155-091	6	GUARD,BUTTON	RESET	
1	146655-715	7	PC BOARD ASS'Y	DISPOSER INTERFACE	
1	146653-875	8	PC BOARD ASS'Y	EAGLET II	
1	146655-720	9	HARNESS ASSY	-P54-	
1	93902-900	10	TERMINAL BOARD	7 POS. TB5	
1	93908-525	11	FUSEBLOCK	3 POS. F2, F3, F4	
2	150822-678	12	FUSEBLOCK	SINGLE F1, F5	
5	20341-091	13	FUSE	0.5A 250V. F1,F2,F3,F4,F5	
13	129361-013	14	LED, SNAP-IN		
1	93909-993	15	SWITCH, ROCKER	AUTO/MAN SW1	
13	150778-001	16	VARISTOR		
1		17	VINYL INSUL TUBE	1/16 X .48" LG. SEE NOTE #6	
6	84123-001	18	BAR, JUMPER		
		19			
4	129361-680	20	STAND-OFF, M/F	#6-32 X 7/16" LG.	
4	129361-082	21	STAND-OFF M/F	#6-32 X 1 3/4" LG.	
1	93910-097	22	CABLE ASS'Y.	J2/P2	
1	136807-651	23	CABLE ASS'Y.	CONTROL BOX	
1	136807-653	24	CABLE ASS'Y.	ROTARY SOLENOID	
1	93910-112	25	LABEL	LED/SWITCH ID SEE NOTE #5	
1	129361-019	26	PLUG, 6 POS.	P1	
1	136807-917	27	HARNESS ASS'Y	P3	
		28			
		29			
1	129361-086	30	PLUG, 12 POS.	J1	
		31			
1	56396-486	32	PLUG, 34 POS.	P7	
		33			
1		34	WIRE, BLACK	7'-0" LG. SEE NOTE #1	
		35	WIRE, WHITE	0'-9" LG. SEE NOTE #2	
1		36	WIRE, BLACK	3'-9" LG. SEE NOTE #2	
1		37	WIRE, WHITE	0'-10" LG. SEE NOTE #3	
1		38	WIRE, BLACK	1'-2" LG. SEE NOTE #3	
		39			
1		40	WIRE, GREEN	6'-6" LG. SEE NOTE #3	
31	150822-810	41	CONTACT, SOCKET	.025 SQ POST 24/20 AWG	
34	129359-024	42	REC., FAST-ON	.020 X .187 TAB 22/18 AWG	
17	150476-410	43	REC., FAST-ON	.032 X .250 TAB 22/18 AWG	
3	129359-454	44	TERM.RING	#18 AWG X #10 STUD	
2	32118-091	45	ADAPTER, OK DISC		
8	129326-001	46	HARNESS MOUNT		
45	84104-001	47	TIE WRAP	SEE NOTE #10	
12	93908-039	48	SCREW, SEMS	#6-32 X 3/8" LG	
12	93908-033	49	SCREW, SEMS	#6-32 X 1/4" LG	
2	93908-037	50	SCREW, SEMS	#8-32 X 1/2" LG	
8	129359-531	51	NUT, KEPS	#8-32	
4	93908-036	52	SCREW, SEMS	#10-32 X 3/8" LG	
5	129359-532	53	NUT, KEPS	#10-32	
		54			
		55			
5	92615-001	56	LABEL	1/2 AMP F1,F2,F3,F4,F5	
3	50527-061	57	SCREW, SOCKET HD	#8-32 X 1/2" LG.	
3	17796-091	58	WASHER, FLAT	.203 ID X .438 OD X .031 THK.	
		59			
1	93910-116	60	PROGRAMMED EPROM	U6	
1	129361-108	61	CONTACT,RECEPTACLE	J7	
1	129361-109	62	HOUSING,RECEPTACLE		
		63			
12	84121-002	64	NUT, KEPS	#6-32	
2	150822-003	65	MARKER, TIE		
		66			
1	129360-814	67	SCREW,GREEN GND	#10-32 X 1/2" LG	
1	129359-025	68	LABEL		
		69			
		70			
		71			
1	18001-091	72	CONN,ELL	3/8	
1	79608-091	73	CONDUIT	3/8 X 52" LG	

CAD DWG.

TOLERANCE STANDARD UNLESS OTHERWISE NOTED | FRACTIONAL ±1/64 ANGULARITY±1° | DECIMAL ±.005 MACH. SURF 125

2	03-18-92	020052
1	12-06-91	910211
1	12-06-91	ECA #6
0	11-04-91	PER #4

AMERICAN STERILIZER COMPANY ERIE, PENNSYLVANIA

TITLE: INTERFACE BOX ASS'Y. MEDALLION

FIRST MADE FOR: 146655-109, 146655-115

DWG. NO. 146655-718 1 OF 3

CAD DWG.

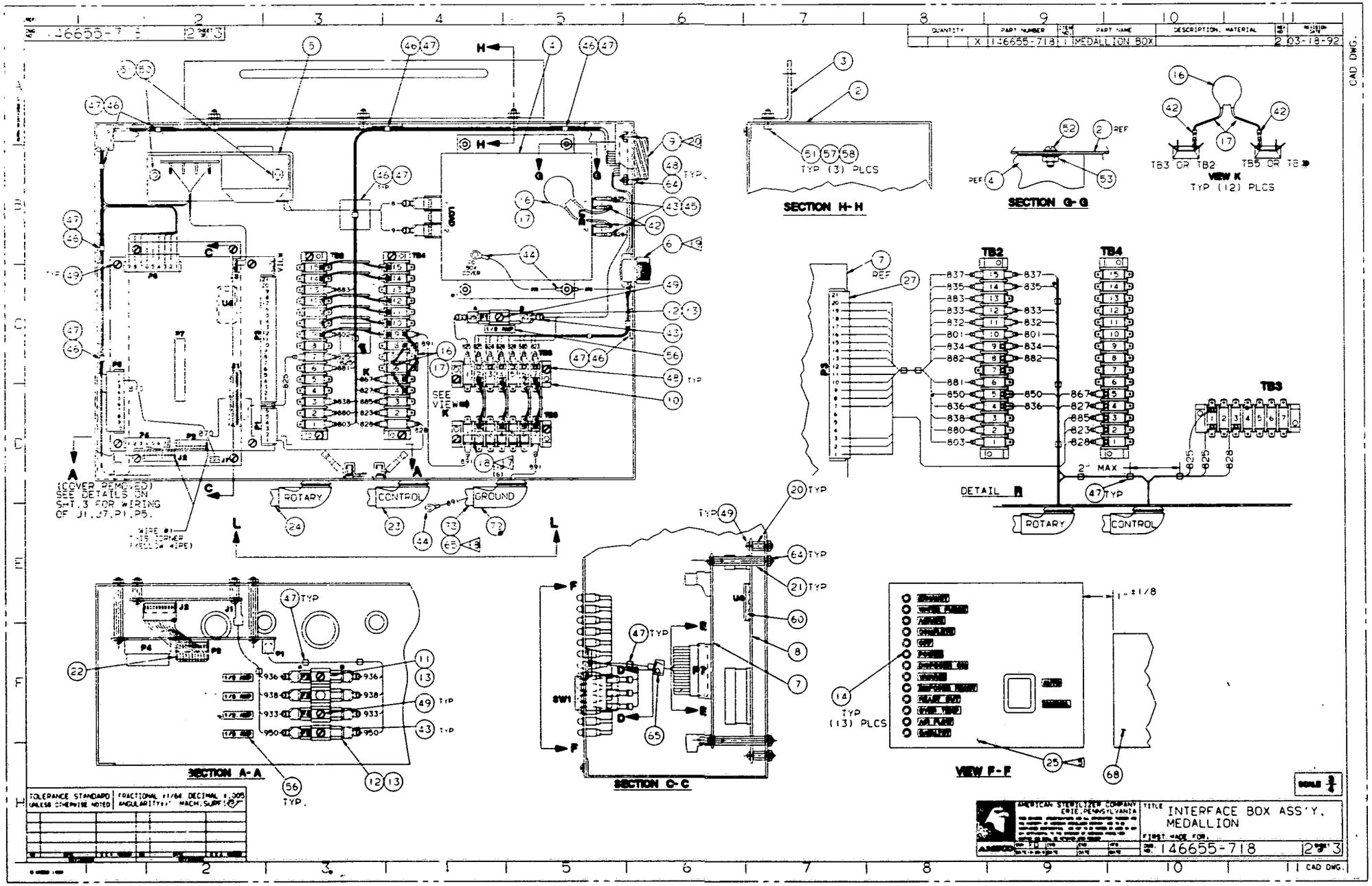
146655-718
QUANTITY
PART NUMBER
PART NAME
DESCRIPTION, MATERIAL
MEDALLION BOX
SECTION H-H
SECTION G-G
VIEW K
TYP (12) PLCS
TB3 OR TB2
TB5 OR TB4
TYP (3) PLCS
TB2
TB4
TB3
DETAIL B
2" MAX
ROTARY
CONTROL
GROUND
SEE VIEW K
(COVER REMOVED) SEE DETAILS ON SHT.3 FOR WIRING OF J1,J7,P1,P5.
SECTION A-A
SECTION C-C
VIEW F-F
TYP (13) PLCS
TOLERANCE STANDARD UNLESS OTHERWISE NOTED
AMERICAN STERILIZER COMPANY ERIE, PENNSYLVANIA
TITLE
INTERFACE BOX ASS'Y. MEDALLION
FIRST MADE FOR
146655-718
CAD DWG.

146655-718 3

WIRE #	ITEM & COLOR	LENGTH	FROM	CONN METH	TO	CONN METH
BLK LEAD			AIR FLOW LED	---	P7-10	A
RED LEAD			AIR FLOW LED	---	P7-27	A
BLK LEAD			CATALYST LED	---	P7-13	A
RED LEAD			CATALYST LED	---	P7-30	A
BLK LEAD			DISPOSER ON LED	---	P7-7	A
RED LEAD			DISPOSER ON LED	---	P7-24	A
BLK LEAD			DISP. READY LED	---	P7-12	A
RED LEAD			DISP. READY LED	---	P7-29	A
BLK LEAD			OVER TEMP LED	---	P7-11	A
RED LEAD			OVER TEMP LED	---	P7-28	A
BLK LEAD			POWER LED	---	P7-9	A
RED LEAD			POWER LED	---	P7-26	A
BLK LEAD			READY LED	---	P7-8	A
RED LEAD			READY LED	---	P7-25	A
BLK LEAD			VACUUM LED	---	P7-6	A
RED LEAD			VACUUM LED	---	P7-23	A
BLK LEAD			AERATE LED	---	P7-1	A
RED LEAD			AERATE LED	---	P7-18	A
BLK LEAD			COMPLETE LED	---	P7-2	A
RED LEAD			COMPLETE LED	---	P7-19	A
BLK LEAD			EXHAUST LED	---	P7-4	A
RED LEAD			EXHAUST LED	---	P7-21	A
BLK LEAD			OFF LED	---	P7-5	A
RED LEAD			OFF LED	---	P7-22	A
BLK LEAD			WATER PURGE LED	---	P7-3	A
RED LEAD			WATER PURGE LED	---	P7-20	A
825			CONTROL CABLE	---	TB3-1	B REF
825	IT.38 BLK	4"	TB3-1	B	P1-A	C
825	IT.38 BLK	2"	P1-A	C	LINE 1	C
825			CONTROL CABLE	---	TB3-1	B REF
825	IT.36 BLK	5"	TB2-7	B	J1-11	F
828			CONTROL CABLE	---	TB3-3	B REF
828	IT.35 WHT	9"	P1-1	B	TB4-1	E
828	IT.37 WHT	10"	TB3-3	B	LINE 2	C
832			ROTARY CABLE	---	TB2-11	B REF
833			ROTARY CABLE	---	TB2-12	B REF
834			ROTARY CABLE	---	TB2-9	B REF
835			ROTARY CABLE	---	TB2-14	B REF
836			CONTROL CABLE	---	TB2-4	B REF
837			ROTARY CABLE	---	TB2-15	B REF
840	IT.34 BLK	12"	P7-31	A	SW1-2	C
841	IT.34 BLK	12"	P7-14	A	SW1-3	C
842	IT.34 BLK	12"	P7-15	A	SW1-4	C
843	IT.34 BLK	12"	P7-17	A	SW1-5	C
844	IT.34 BLK	12"	P7-16	A	SW1-6	C
850			CONTROL CABLE	---	TB2-5	B REF
867			ROTARY CABLE	---	TB4-5	B REF
870	IT.36 BLK	8"	P7-2	F	P5-2	E
882			CONTROL CABLE	---	TB2-8	B
933	IT.36 BLK	8"	J1-9	F	F4-A	C
933	IT.34 BLK	6"	F3-B	C	P1-5	E
936	IT.36 BLK	8"	J1-7	F	F2-A	C
936	IT.34 BLK	6"	F2-B	C	P1-3	E
938	IT.36 BLK	8"	J1-8	F	F3-A	C
938	IT.34 BLK	6"	F3-B	C	P1-4	E
950	IT.36 BLK	8"	J1-10	F	F5-A	C
950	IT.34 BLK	6"	F5-B	C	P1-6	E
891	IT.40 GRN	6"	TB4-9	B	TB5-1	B
891	IT.40 GRN	60"	GROUND CABLE	G	TB5-7	B
990	IT.40 GRN	12"	BOX COVER	G	IT.4 TOP	G
801			CONTROL CABLE	---	TB2-1	B REF
827			ROTARY CABLE	---	TB4-4	B REF

TOLERANCE STANDARD UNLESS OTHERWISE NOTED | FRACTIONAL ±1/64 DECIMAL ±.005 ANGULARITY±1° MACH. SURF 63

QUANTITY	PART NUMBER	ITEM NO.	PART NAME	DESCRIPTION, MATERIAL	REV	REVISION DATE
X	146655-718	1	INTERFACE BOX	MEDALLION	2	03-18-92

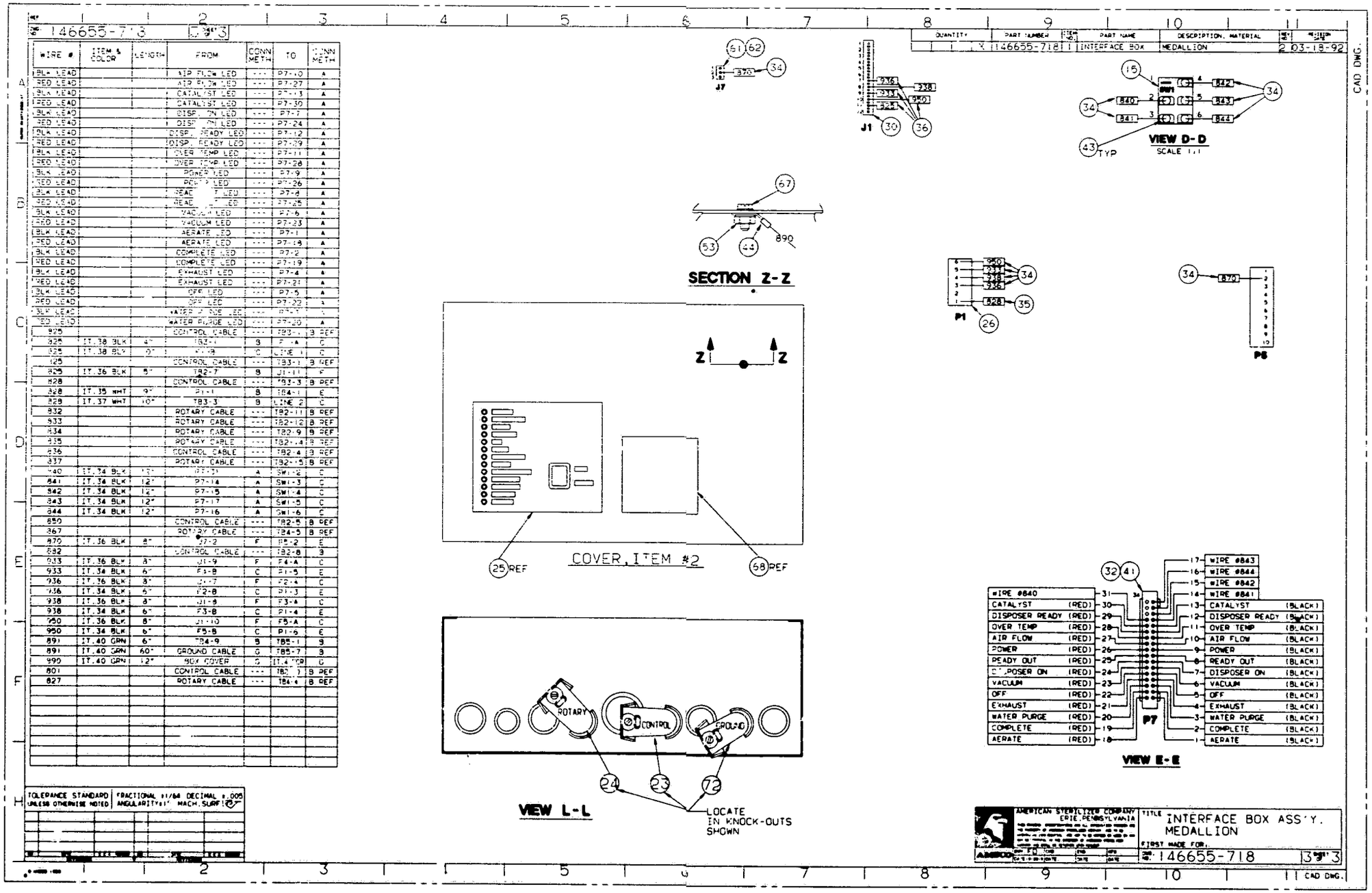

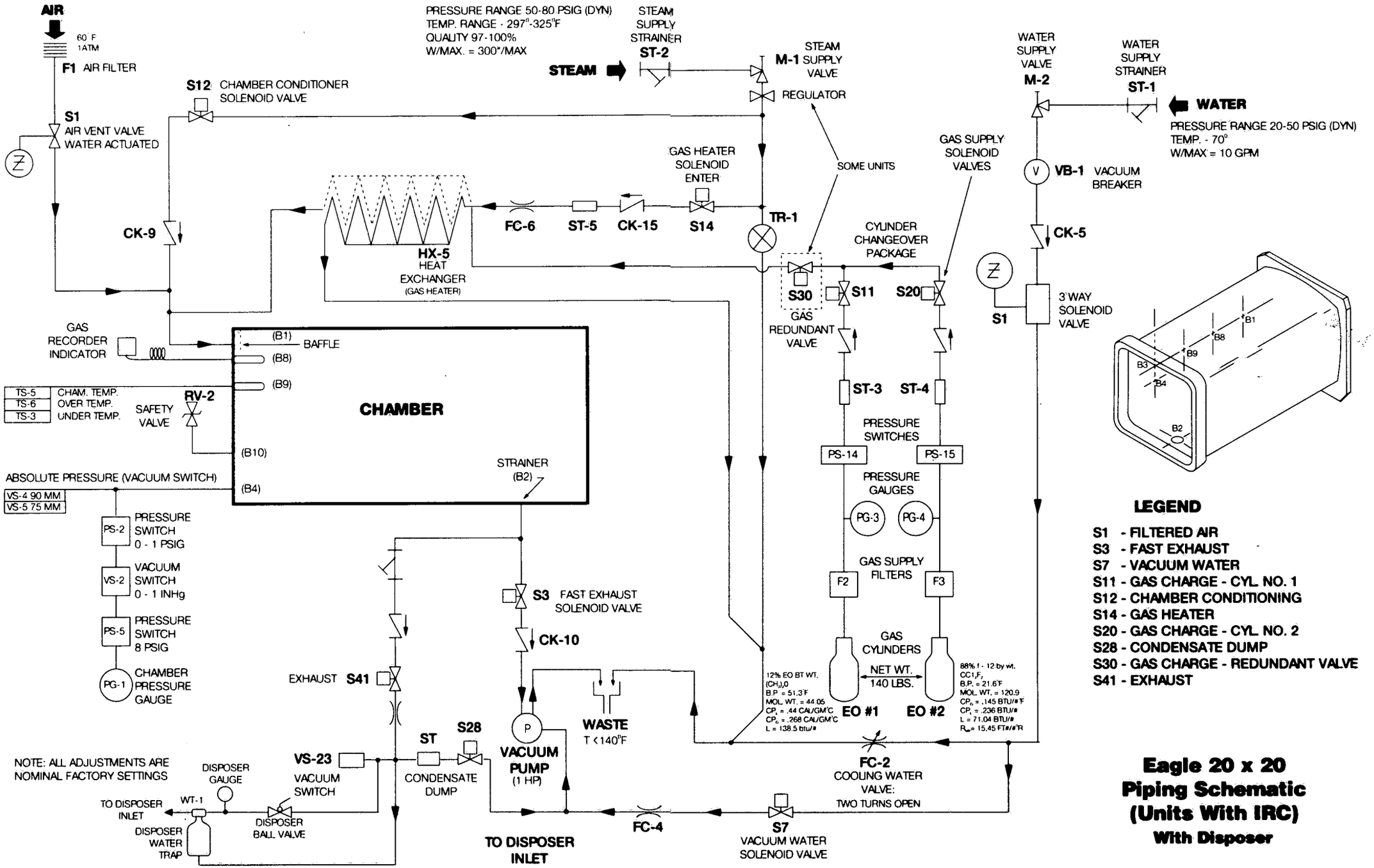
AIR
60° F
1ATM
F1 AIR FILTER
S1
AIR VENT VALVE
WATER ACTUATED
S12 CHAMBER CONDITIONER SOLENOID VALVE
CK-9
PRESSURE RANGE 50-80 PSIG (DYN)
TEMP. RANGE - 297°-325°F
QUALITY 97-100%
W/MAX. = 300#/MAX
STEAM
STEAM SUPPLY STRAINER
ST-2
M-1 STEAM SUPPLY VALVE
REGULATOR
SOME UNITS
GAS HEATER SOLENOID ENTER
FC-6
ST-5
CK-15
S14
TR-1
HX-5
HEAT EXCHANGER
(GAS HEATER)
GAS SUPPLY SOLENOID VALVES
CYLINDER CHANGEOVER PACKAGE
S30
S11
S20
GAS REDUNDANT VALVE
ST-3
ST-4
PRESSURE SWITCHES
PS-14
PS-15
PRESSURE GAUGES
PG-3
PG-4
GAS SUPPLY FILTERS
F2
F3
GAS CYLINDERS
NET WT. 140 LBS.
EO #1
EO #2
12% EO BT WT.
(CH2)2O
B.P. = 51.3°F
MOL. WT. = 44.05
CPL = .44 CAL/GM°C
CPG = .268 CAL/GM°C
L = 138.5 btu/#
88% f - 12 by wt.
CCl2F2
B.P. = 21.6°F
MOL. WT. = 120.9
CPL = .145 BTU/#°F
CPG = .236 BTU/#
L = 71.04 BTU/#
RW = 15.45 FT#/#°R
WATER SUPPLY VALVE
M-2
WATER SUPPLY STRAINER
ST-1
WATER
PRESSURE RANGE 20-50 PSIG (DYN)
TEMP. - 70°
W/MAX = 10 GPM
VB-1 VACUUM BREAKER
CK-5
3 WAY SOLENOID VALVE
S1
GAS RECORDER INDICATOR
(B1)
BAFFLE
(B8)
(B9)
CHAMBER
TS-5 CHAM. TEMP.
TS-6 OVER TEMP.
TS-3 UNDER TEMP.
SAFETY VALVE
RV-2
(B10)
(B4)
STRAINER
(B2)
ABSOLUTE PRESSURE (VACUUM SWITCH)
VS-4 90 MM
VS-5 75 MM
PS-2 PRESSURE SWITCH 0 - 1 PSIG
VS-2 VACUUM SWITCH 0 - 1 INHg
PS-5 PRESSURE SWITCH 8 PSIG
PG-1 CHAMBER PRESSURE GAUGE
S3 FAST EXHAUST SOLENOID VALVE
CK-10
EXHAUST S41
WASTE
T < 140°F
VACUUM PUMP
(1 HP)
S28
ST
CONDENSATE DUMP
VS-23
VACUUM SWITCH
DISPOSER GAUGE
NOTE: ALL ADJUSTMENTS ARE NOMINAL FACTORY SETTINGS
TO DISPOSER INLET
WT-1
DISPOSER WATER TRAP
DISPOSER BALL VALVE
TO DISPOSER INLET
FC-4
FC-2
COOLING WATER VALVE:
TWO TURNS OPEN
S7
VACUUM WATER SOLENOID VALVE
B1
B8
B9
B3
B4
B2
LEGEND
S1 - FILTERED AIR
S3 - FAST EXHAUST
S7 - VACUUM WATER
S11 - GAS CHARGE - CYL. NO. 1
S12 - CHAMBER CONDITIONING
S14 - GAS HEATER
S20 - GAS CHARGE - CYL. NO. 2
S28 - CONDENSATE DUMP
S30 - GAS CHARGE - REDUNDANT VALVE
S41 - EXHAUST
Eagle 20 x 20
Piping Schematic
(Units With IRC)
With Disposer

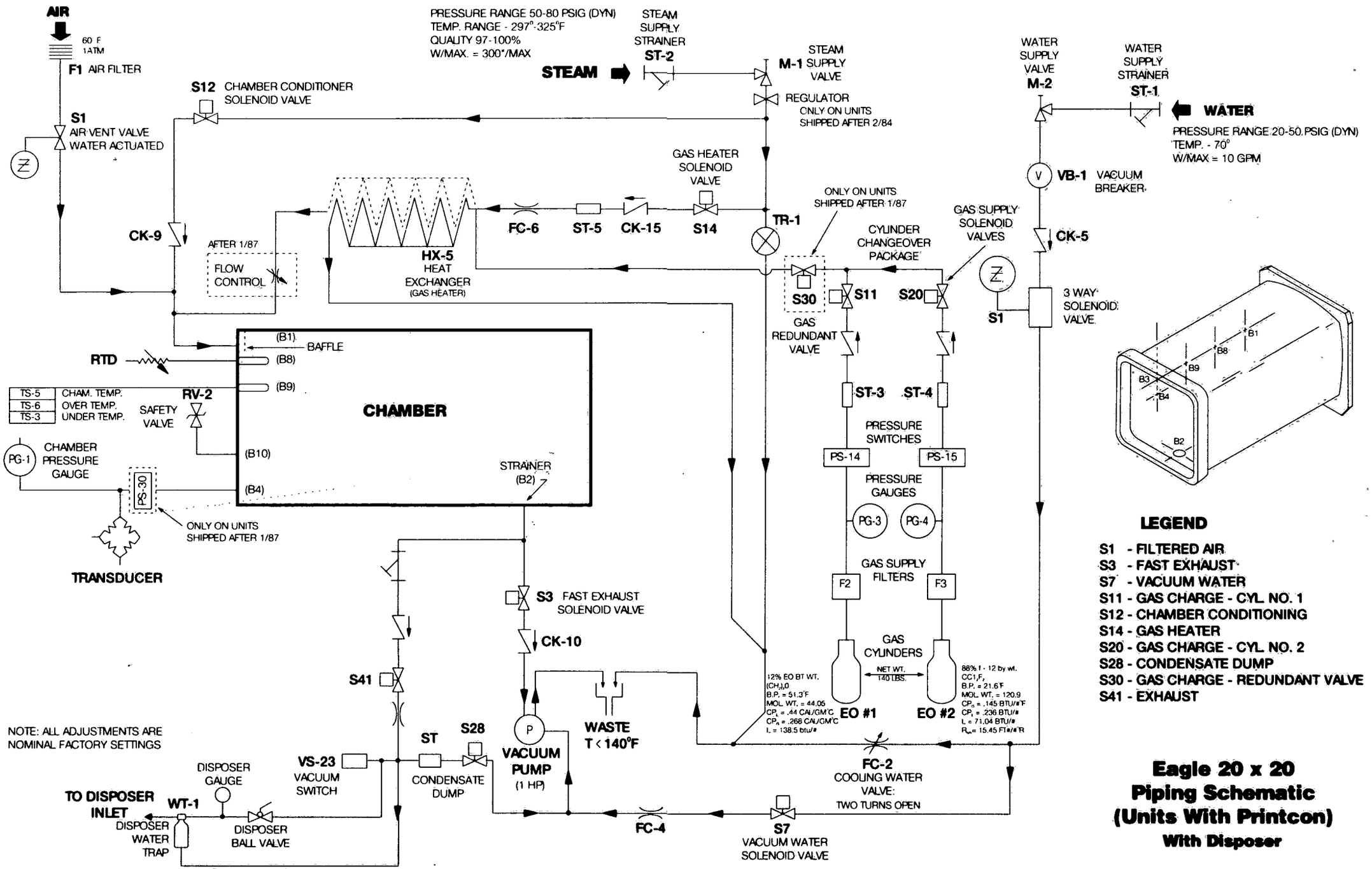
AIR
60 F
1ATM
F1 AIR FILTER
S1
AIR VENT VALVE
WATER ACTUATED
S12 CHAMBER CONDITIONER
SOLENOID VALVE
PRESSURE RANGE 50-80 PSIG (DYN)
TEMP. RANGE - 297°-325°F
QUALITY 97-100%
W/MAX. = 300#/MAX
STEAM
STEAM
SUPPLY
STRAINER
ST-2
M-1 STEAM SUPPLY
VALVE
REGULATOR
ONLY ON UNITS
SHIPPED AFTER 2/84
WATER
SUPPLY
VALVE
M-2
WATER
SUPPLY
STRAINER
ST-1
WATER
PRESSURE RANGE 20-50 PSIG (DYN)
TEMP. - 70°
W/MAX = 10 GPM
VB-1 VACUUM
BREAKER
GAS HEATER
SOLENOID
VALVE
ONLY ON UNITS
SHIPPED AFTER 1/87
GAS SUPPLY
SOLENOID
VALVES
CYLINDER
CHANGEOVER
PACKAGE
CK-5
CK-9
AFTER 1/87
FLOW
CONTROL
HX-5
HEAT
EXCHANGER
(GAS HEATER)
FC-6
ST-5
CK-15
S14
TR-1
S30
S11
S20
S1
3 WAY
SOLENOID
VALVE
GAS
REDUNDANT
VALVE
RTD
(B1)
BAFFLE
(B8)
(B9)
TS-5 CHAM. TEMP.
TS-6 OVER TEMP.
TS-3 UNDER TEMP.
RV-2
SAFETY
VALVE
CHAMBER
(B10)
(B4)
STRAINER
(B2)
PG-1
CHAMBER
PRESSURE
GAUGE
PS-30
ONLY ON UNITS
SHIPPED AFTER 1/87
TRANSDUCER
ST-3
ST-4
PRESSURE
SWITCHES
PS-14
PS-15
PRESSURE
GAUGES
PG-3
PG-4
GAS SUPPLY
FILTERS
F2
F3
GAS
CYLINDERS
NET WT.
140 LBS.
12% EO BT WT.
(CH2)2O
B.P. = 51.3°F
MOL. WT. = 44.05
CPL = .44 CAL/GM°C
CPG = .268 CAL/GM°C
L = 138.5 btu/#
EO #1
EO #2
86% I - 12 by wt.
CCl2F2
B.P. = 21.6°F
MOL. WT. = 120.9
CPL = .145 BTU/#°F
CPG = .236 BTU/#
L = 71.04 BTU/#
RW = 15.45 FT#/#°R
S3 FAST EXHAUST
SOLENOID VALVE
CK-10
S41
WASTE
T < 140°F
VACUUM
PUMP
(1 HP)
S28
ST
CONDENSATE
DUMP
VS-23
VACUUM
SWITCH
DISPOSER
GAUGE
TO DISPOSER
INLET
WT-1
DISPOSER
WATER
TRAP
DISPOSER
BALL VALVE
FC-4
S7
VACUUM WATER
SOLENOID VALVE
FC-2
COOLING WATER
VALVE:
TWO TURNS OPEN
NOTE: ALL ADJUSTMENTS ARE
NOMINAL FACTORY SETTINGS
B1
B8
B9
B3
B4
B2
LEGEND
S1 - FILTERED AIR
S3 - FAST EXHAUST
S7 - VACUUM WATER
S11 - GAS CHARGE - CYL. NO. 1
S12 - CHAMBER CONDITIONING
S14 - GAS HEATER
S20 - GAS CHARGE - CYL. NO. 2
S28 - CONDENSATE DUMP
S30 - GAS CHARGE - REDUNDANT VALVE
S41 - EXHAUST
Eagle 20 x 20
Piping Schematic
(Units With Printcon)
With Disposer

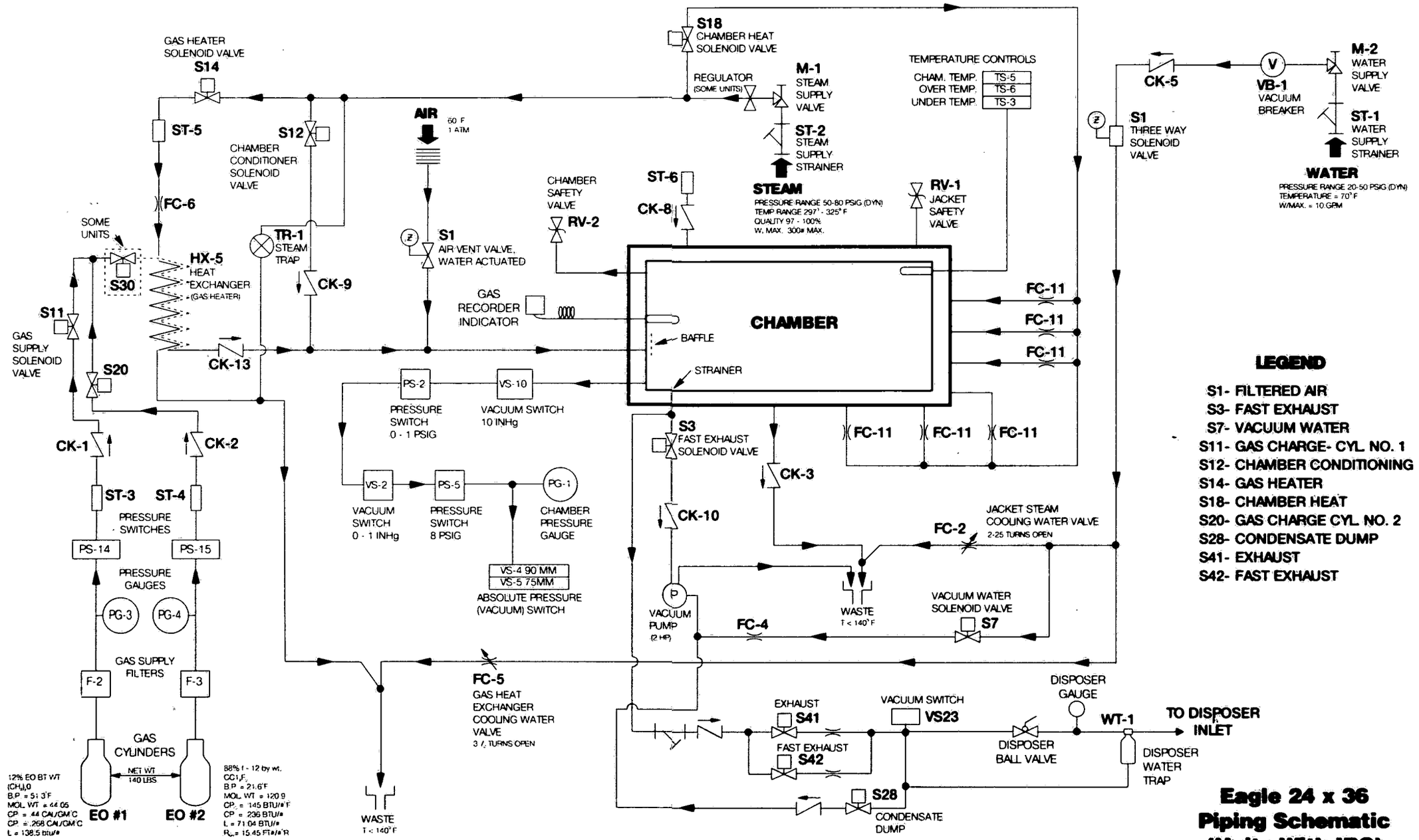

Eagle 24 x 36 Piping Schematic (Units With IRC)

With Disposer

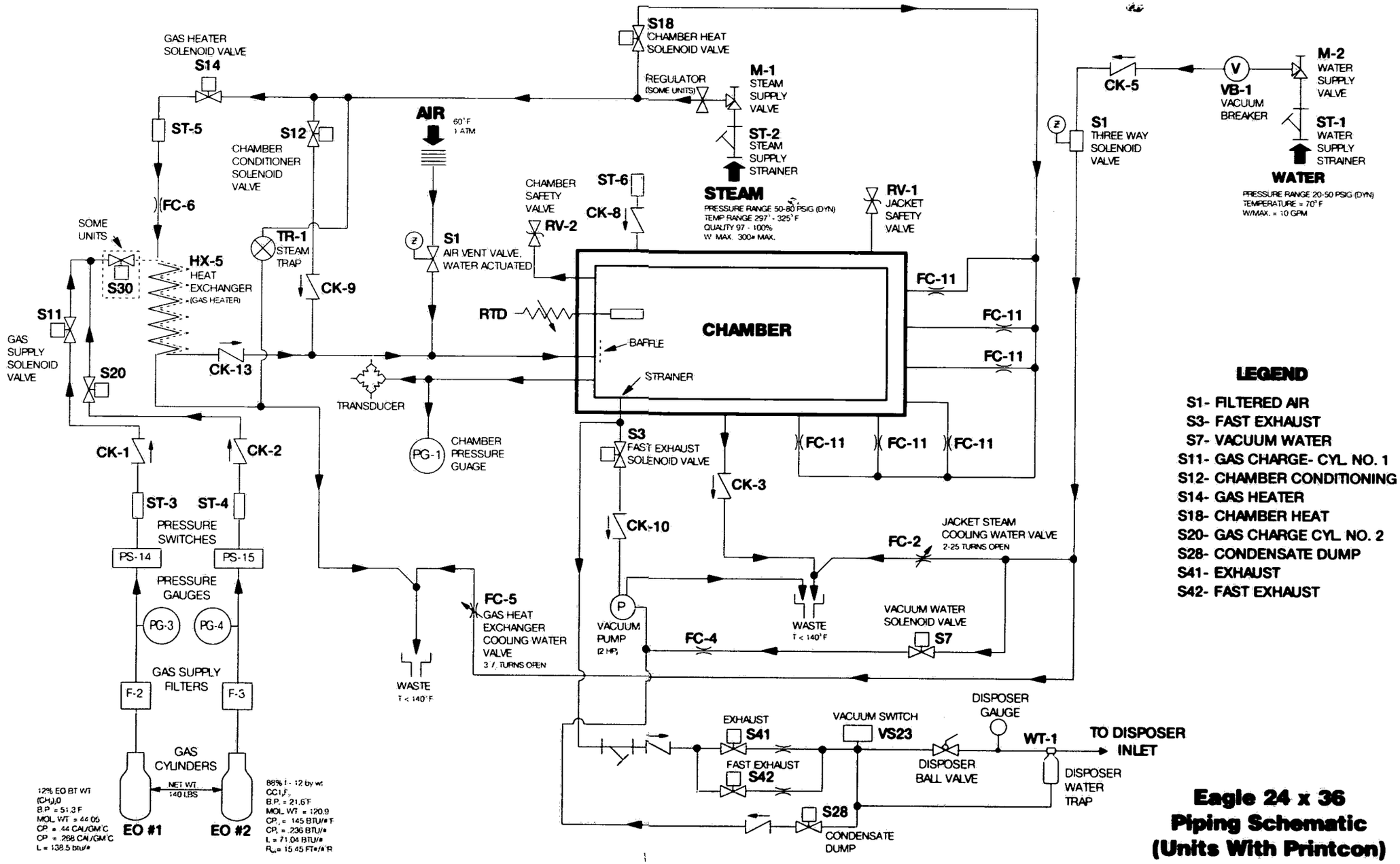

LEGEND

S1- FILTERED AIR
S3- FAST EXHAUST
S7- VACUUM WATER
S11- GAS CHARGE- CYL. NO. 1
S12- CHAMBER CONDITIONING
S14- GAS HEATER
S18- CHAMBER HEAT
S20- GAS CHARGE CYL. NO. 2
S28- CONDENSATE DUMP
S41- EXHAUST
S42- FAST EXHAUST

Eagle 24 x 36 Piping Schematic (Units With Printcon)
With Disposer

REF 146653-868, 146655-120

DWG NO. 146655-119 | SHEET 3

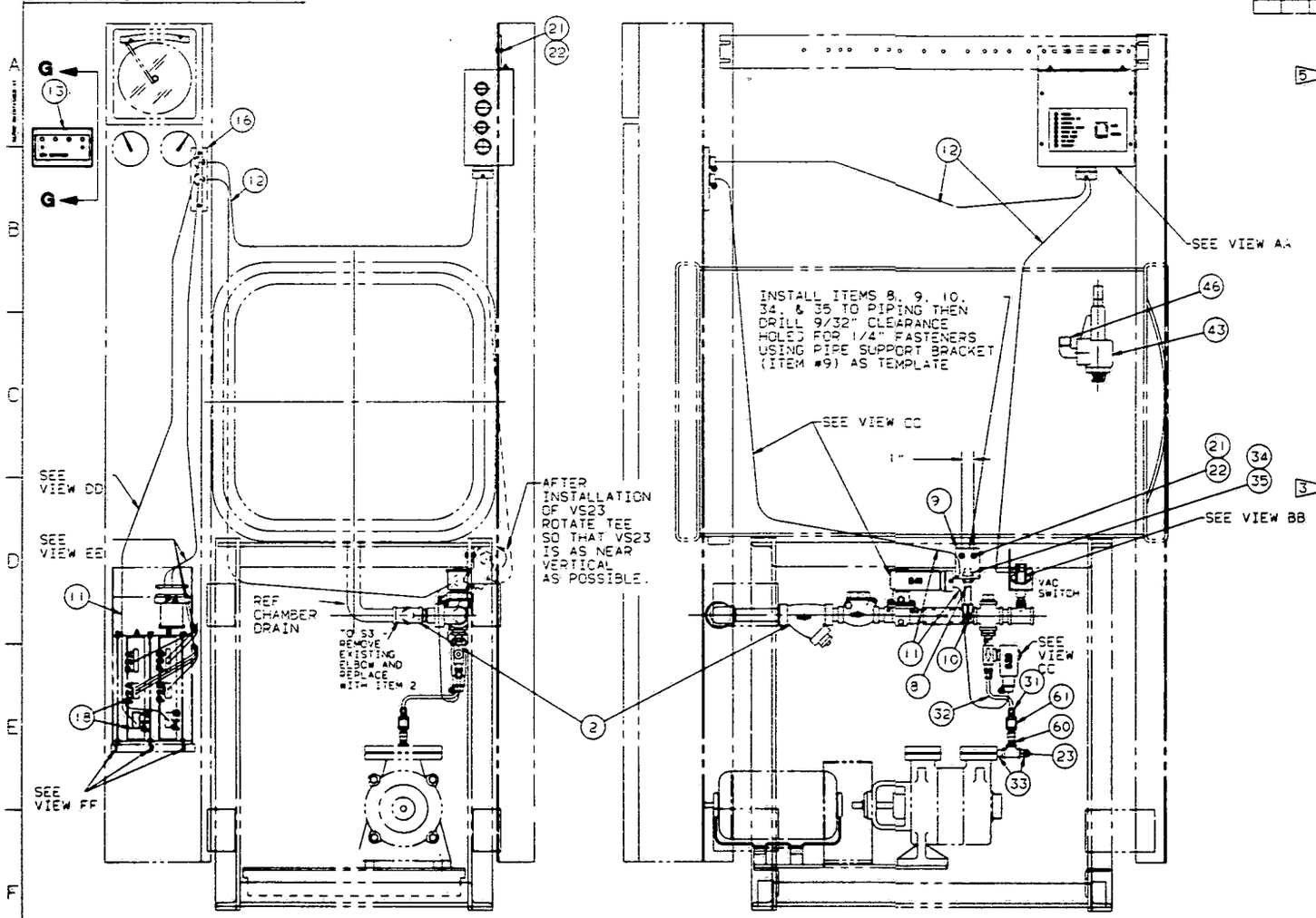

QUANTITY		ITEM NO.	PART NAME	DESCRIPTION, MATERIAL	REV NO.	REVISION DATE
	X	146655-119	1	DISPOSER KIT	20" ROUND CHART 2000	7 03-09-92
1		136806-983	2	VALVE ASS'Y	S41	
1		146655-121	3	SCHEMATIC, ELEC.	REF. DWG.	
1		136806-997	4	BOX, INTERFACE		
1		129361-107	5	INSTALL. INST.	REF. DWG.	
1	5	83866-001	6	SWITCH, VAC	VS23	
1		93909-980	7	BRKT. VAC SW.		
1		150822-295	8	SUPPORT, PIPE	1/4" NPT X 3 1/4" LG.	
1		93909-979	9	BRKT. PIPE SPT.		
1		39590-010	10	CLAMP, PIPE	1/4" NPT	
1		136807-667	11	CABLE, AC		
1		136807-668	12	CABLE, DC		
1		93910-135	13	LIGHT BOX ASS'Y		
4		3985-041	14	SCREW, RD.HD.	#6-32 x 3/4" LG.	
4		19675-041	15	LOCKWASHER	#6	
1		129084-001	16	JUNCTION BOX		
2		91354-045	17	CLAMP, CORD		
2		93829-001	18	HOUSING, PLUG	P1A, P2A	
			19			
			20			
4		129361-716	21	SCREW, FLG LOCK	1/4-20 X 1" LG.	
4		129360-015	22	NUT, FLG LOCK	1/4-20	
1		4906-091	23	TEE	1/4" NPT	
8		18538-091	24	NUT, WIRE		
1		129361-022	25	PLUG, 10 POS	P5	
1		129361-023	26	PLUG, 21 POS	P3	
1		93910-652	27	ASSEMBLY	PROGRAMMED CHIPS	
1		93910-653	28	TRAP, WATER		
1		22472-091	29	RED., BUSHING	3/4 NPT X 1/4 NPT	
1		45407-091	30	ELL, COMP.	1/4 NPT X 1/4 CDT	
2		34218-091	31	FITTING, STR.	1/4 OD X 1/4" NPT	
1			32	TUBING, COPPER	1/4" OD X 144" LG. SEE NOTE #2	
3		28917-091	33	NIPPLE, BRASS	1/4" NPT X 1" LG.	
2		150828-689	34	NUT, LOCK	1/4-18 NPSL	
2		52148-045	35	LOCKWASHER	9/16" ID	
1	3		36		REF PRINT P/N 146655-119	
2		129361-115	37	WALLTRAK	5' LG.	
2		129361-116	38	FLAT ELBOW	WALLTRAK	
2		129361-117	39	SPLICE	WALLTRAK	
			40			
			41			
2		150822-003	42	TIE MARKER	LABEL "P1A" AND "P2A"	
1		150828-475	43	VALVE, SAFETY	1/2" NPT	
1		129361-124	44	EQUIPMENT MANUAL	REF. DWG.	
1		93910-145	45	WIRING CONNECTIONS	DISPOSER - REF. DWG.	
1		44500-091	46	ELL, 90°	SOLDER JOINT FITTING	
1		84205-001	47	HOUSING, PIN	P3A	
2		84192-001	48	JACKSCREW	FEMALE, P3A	
2		3439-091	49	PIPE PLUG	1/8 NPT	
1		146581-004	50	MOTHERBOARD ASSEMBLY		
1		146590-058	51	PC BOARD		
1		146645-226	52	CONTROL, PRIMARY		
1			53	WIRE	#22 AWG BLACK, SEE NOTE #6	
1		129352-535	54	HOUSING	CONNECTOR, 3 POS. P13	
2		84187-003	55	SOCKET	CONTACT	
2		84207-002	56	PIN, CONTACT		
1		83528-001	57	I.D. LOCKING TAB		
2		84225-001	58	CARD GUIDE		
3		84226-001	59	LOCKING TAB		
1		150828-262	60	VALVE, CHECK		
1		45589-091	61	COUPLING	1/4 NPT	
1		939-091	62	BUSHING, RED.	1/4 NPT X 1/8 NPT	
1		76053-091	63	BUSHING, RED.	1/2 NPT X 1/4 NPT	
1		90525-091	64	GAUGE	1/8 NPT	
1		129356-508	65	TEE, SOLDER	3/4 X 3/4 X 1/2 NPT	
1		93910-642	66	VALVE, BALL	3/4 SOLDER	
1		764317-524	67	TAPE, TEFLON		
1		129362-980	68	GUIDELINES, DISP.		
1		146657-256	69	SCHEMATIC		
1		150822-048	70	VALVE, BALL		

NOTES:

1. USE PIPE SEALANT PER AMSCO DWG. 150822-020 ON ALL THREADED PIPE JOINTS.
2. COPPER TUBING .030 WALL X 1/4" OD. SOFT ANNEALED. ASTM B280.

3. INCLUDE WITH EACH KIT ONE PRINT, P/N 146655-119.

5. LABEL VACUUM SWITCH "VS23", ITEM 6, WITH MARKER, BLACK LETTERS ON YELLOW BACKGROUND.

6. WIRE SPEC: #22 AWG STRANDED COPPER, 19/34 STRANDING, 300 VOLT, 105°C, TEFLON INSULATION, UL/CSA LABELS REQ'D, 48" LONG.

TOLERANCE STANDARD UNLESS OTHERWISE NOTED | FRACTIONAL ±1/64 ANGULARITY±1° | DECIMAL ±.005 MACH. SURF 125

REV	DATE	BY	CHK	REVISION
3	02-12-90	RA#107	6	02-10-92 920034
2	09-06-89	RA 47	5	11-11-91 910211
1	6-20-89	RA 29	4	10-08-90 900200
0	6-7-89	PER 15	4	10-08-90 RA#170 7 03-09-92 920052

AMERICAN STERILIZER COMPANY
ERIE, PENNSYLVANIA

TITLE: ETO DISPOSER KIT ASS'Y 20X20 IRC EAGLE 2000

FIRST MADE FOR:

DWG NO. 146655-119 | SHEET 3

CAD DWG.

146655-119 2 SHEET 3

QUANTITY	PART NUMBER	ITEM NO	PART NAME	DESCRIPTION, MATERIAL	REV NO	REVISION DATE
1 X	146655-119	1	DISPOSER	120" IRC		03-09-92

CAD DWG.

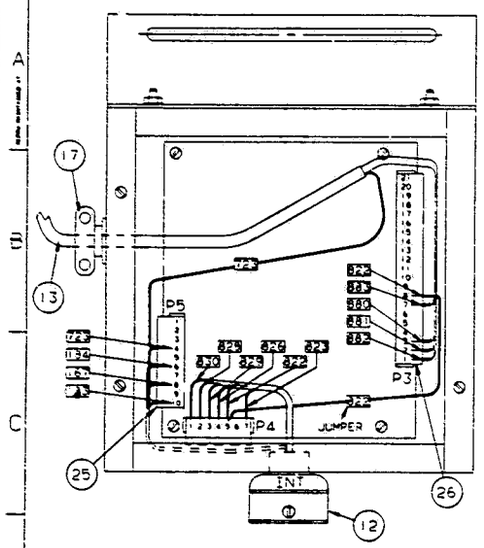

VIEW AA

(4) INTERFACE BOX

SCALE: 3/4:1

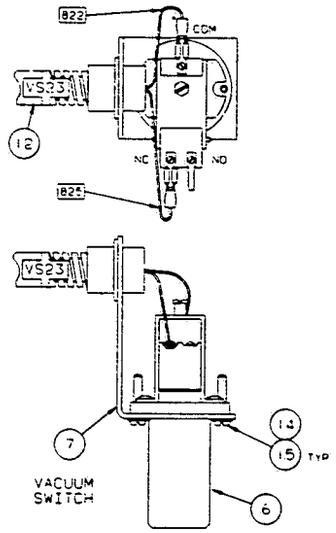

VIEW BB

SCALE: 1:1

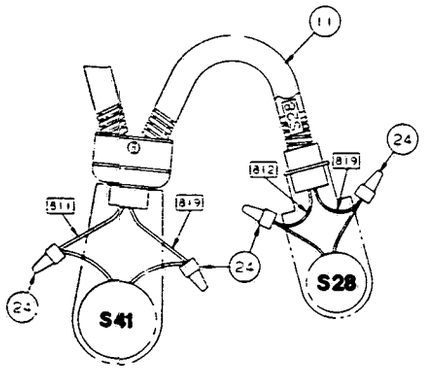

VIEW CC

SCALE: 3/4:1

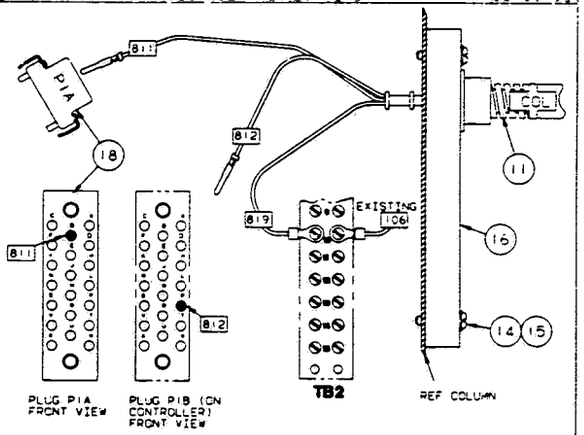

AC COLUMN CONNECTIONS

VIEW DD

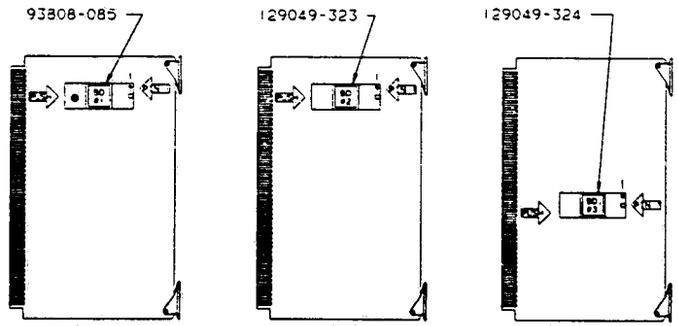

BOARD #1 (CPU)

BOARD #2 (1/01)

BOARD #3 (1/02)

VIEW FF

SCALE: 1/2:1

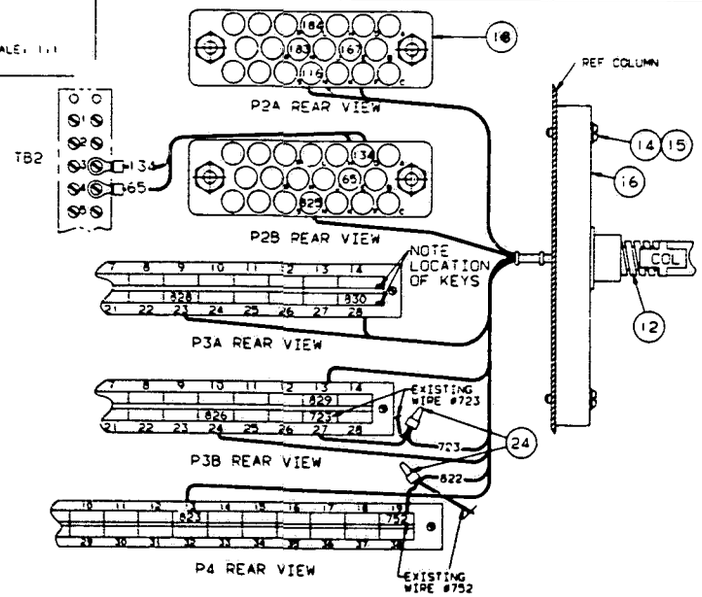

DC CONNECTIONS INSIDE COLUMN

VIEW EE

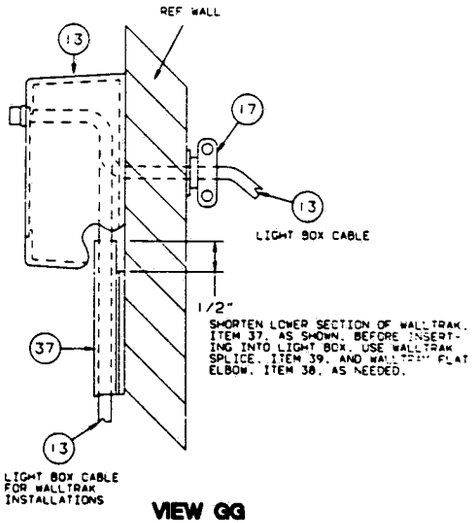

VIEW GG

TOLERANCE STANDARD UNLESS OTHERWISE NOTED | FRACTIONAL ±1/64 DECIMAL ±.005 ANGULARITY ±1° MACH. SURF. 125

AMSCO — AMERICAN STERILIZER COMPANY ERIE, PENNSYLVANIA

TITLE: ETO DISPOSER KIT ASS'Y 20X20 IRC EAGLE 2000

FIRST MADE FOR:

DWG NO. 146655-119 2 SHEET 3

CAD DWG.

DWG. NO. 146655-119 SHEET 3 OF 3

QUANTITY	PART NUMBER	ITEM NO.	PART NAME	DESCRIPTION, MATERIAL	REVISION
X	146655-119	1	DISPOSER KIT	120" ROUND CHART 2000	7 [illegible]-09-92

CAD DWG.

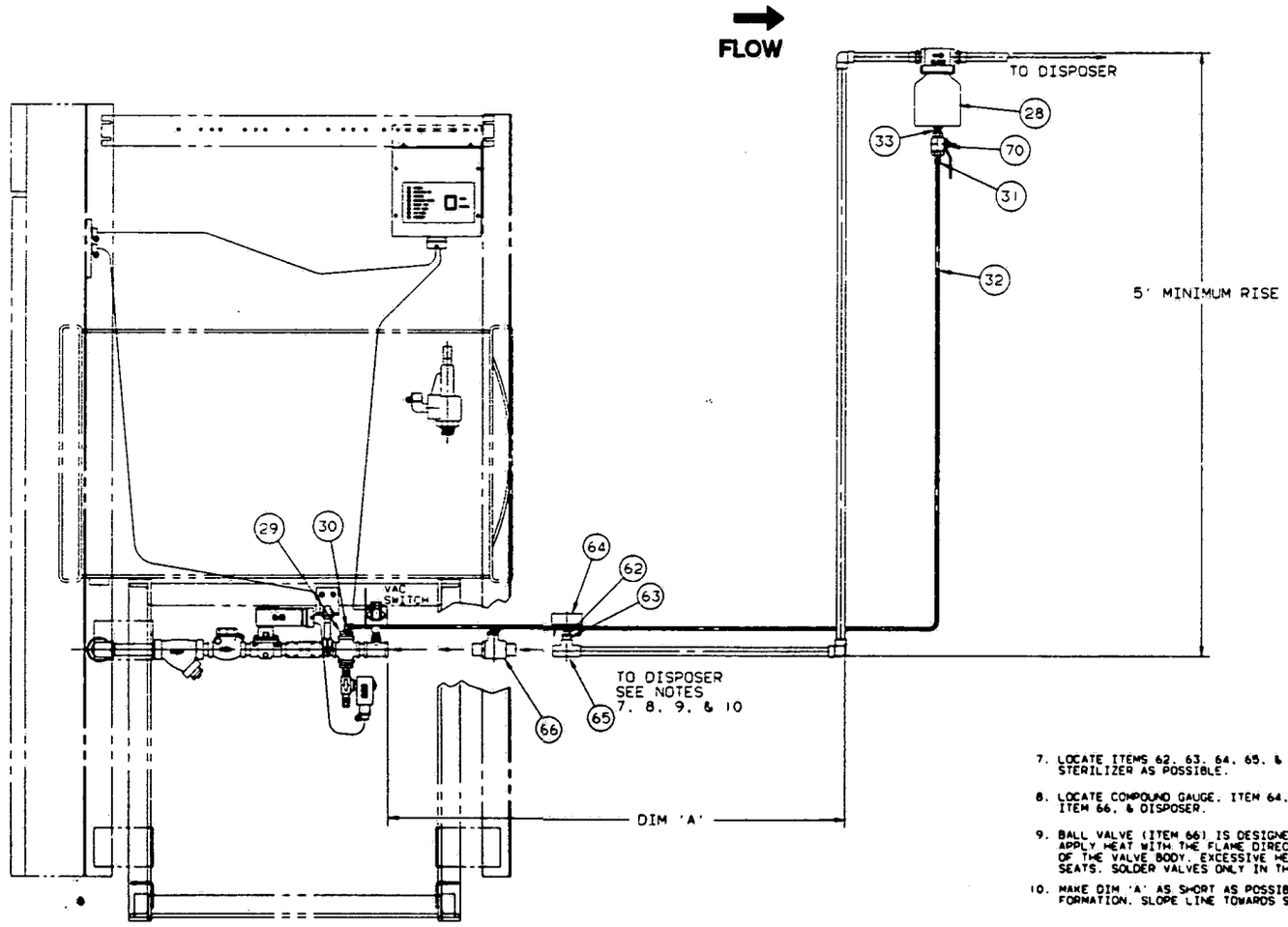

7. LOCATE ITEMS 62, 63, 64, 65, & 66 AS CLOSE TO STERILIZER AS POSSIBLE.

8. LOCATE COMPOUND GAUGE, ITEM 64, BETWEEN BALL VALVE, ITEM 66, & DISPOSER.

9. BALL VALVE (ITEM 66) IS DESIGNED TO BE SOFT SOLDERED. APPLY HEAT WITH THE FLAME DIRECTED AWAY FROM THE CENTER OF THE VALVE BODY. EXCESSIVE HEAT CAN HARM THE TEFLON SEATS. SOLDER VALVES ONLY IN THE FULLY CLOSED POSITION.

10. MAKE DIM 'A' AS SHORT AS POSSIBLE TO REDUCE WATER FORMATION. SLOPE LINE TOWARDS STERILIZER.

TOLERANCE STANDARD UNLESS OTHERWISE NOTED	FRACTIONAL ±1/64 DECIMAL ±.005 ANGULARITY ±1° MACH. SURF. 125

AMSCO — AMERICAN STERILIZER COMPANY, ERIE, PENNSYLVANIA

TITLE: STO DISPOSER KIT ASS'Y 20X20 IRC EAGLE 2000

FIRST MADE FOR:

DWG. NO. 146655-119 SHEET 3 OF 3

CAD DWG.

146653-868 | 11"3

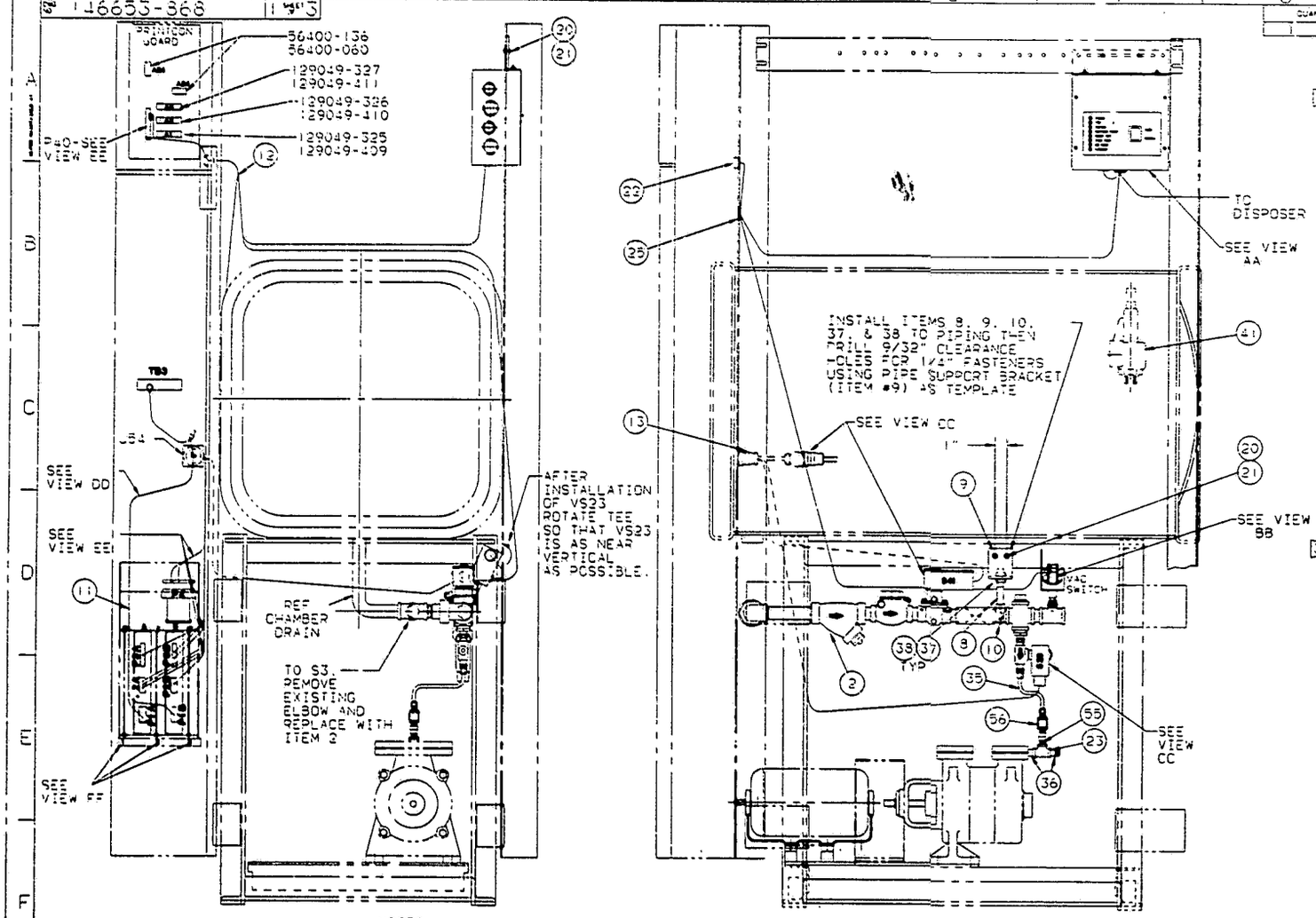

QUANTITY		PART NUMBER	ITEM NO.	PART NAME	DESCRIPTION, MATERIAL	ATT. MISC.
1	X	146653-868	1	DISPOSER KIT	20" PRINTCON	7/03-09-92
1		136806-933	2	VALVE ASS'Y	541	
1		146653-373	3	SCHEMATIC, ELEC.	REF. DWG.	
1		136806-997	4	BOX, INTERFACE		
1		129361-089	5	INSTALL. INST.	REF. DWG.	
1		83866-001	6	SWITCH, VAC	VS23	
1		93909-980	7	BRKT. VAC SW.		
1		150822-295	8	SUPPORT, PIPE	1/4" NPT X 3 7/8" LG.	
1		93909-979	9	BRKT. PIPE SPT.		
1		39590-010	10	CLAMP, PIPE	1/4" NPT	
1		146653-872	11	ASSY. HARNESS	AC	
1		136806-994	12	CABLE, DC		
1		146653-371	13	CABLE, AC		
2		3984-041	14	SCREW, RD.HD.	#6-32 X 3/8" LG.	
2		19675-041	15	LOCKWASHER	#6	
4		3949-042	16	SCREW, RD.HD.	1/4-20 X 3/4" LG.	
4		129359-533	17	NUT, AERS	1/4-20	
4		150473-295	18	WASHER, FLAT	.281 ID X .625 OD X .063 THK	
			19			
4		129361-716	20	SCREW, FLG LOCK	1/4-20 X 1" LG.	
4		129360-015	21	NUT, FLG LOCK	1/4-20	
3		76262-091	22	BUSHING, SNAP		
1		4906-091	23	TEE	1/4" NPT	
6		18538-091	24	NUT, WIRE		
4		129326-001	25	MOUNT, HARNESS		
6		84104-001	26	TIE, WIRE		
1		93910-651	27	ASSEMBLY	PROGRAMMED CHIPS	
1		150822-048	28	VALVE, BALL		
			29			
1		129362-980	30	GUIDELINES, DISP.		
1		93910-653	31	TRAP, WATER		
1		22472-091	32	BUSHING, RED.	3/4 NPT X 1/4 NPT	
1		45407-091	33	ELBOW, COMP.	1/4 NPT X 1/4 ODT	
2		34218-091	34	FITTING, STR.	1/4 OD X 1/4" NPT	
1			35	TUBING, COPPER	1/4 OD X 144" LG. SEE NOTE #2	
3		28917-091	36	NIPPLE, BRASS	1/4 NPT X 1" LG.	
2		150828-689	37	NUT, LOCK	1/4-18 NPSL	
2		52148-045	38	LOCKWASHER	9/16" ID	
			39		REF PRINT P/N 146653-868	
1		146657-255	40	SCHEMATIC		
1		150828-475	41	VALVE, SAFETY	1/2" NPT	
3		91354-045	42	CLAMP, CORD		
1		129361-123	43	EQUIPMENT MANUAL	REF. DWG.	
1		93910-145	44	WIRING CONNECTIONS	DISPOSER - REF. DWG.	
1		84205-001	45	HOUSING, PIN	P3A	
2		84192-001	46	JACKSCREW	FEMALE, P3A	
2		3439-091	47	PIPE PLUG	1/8 NPT	
			48	WIRE	#22 AWG BLACK, SEE NOTE #7	
1		129352-535	49	HOUSING	CONNECTOR, 3 POS. P13	
2		84187-003	50	SOCKET	CONTACT	
2		84207-002	51	PIN, CONTACT		
1		83528-001	52	I.D. LOCKING TAB		
2		84225-001	53	CARD GUIDE		
3		84226-001	54	LOCKING TAB		
1		150828-262	55	VALVE, CHECK		
1		45589-091	56	COUPLING	1/4 NPT	
1		939-091	57	BUSHING, RED	1/4 NPT X 1/8 NPT	
1		76053-091	58	BUSHING, RED	1/2 NPT X 1/4 NPT	
1		90525-091	59	GAUGE	1/8 NPT	
1		129356-508	60	TEE, SOLDER	7/8 ODT X 7/8 ODT X 1/2 NPT	
1		93910-642	61	VALVE, BALL	7/8 ODT SOLDER	
			62			
			63			
			64			
			65			
1		764317-524	66	TAPE, TEFLON		

NOTES:

1. USE PIPE SEALANT PER AMSCO DWG. 150822-020 ON ALL THREADED PIPE JOINTS.
2. COPPER TUBING .030 WALL X 1/4" OD. SOFT ANNEALED, ASTM B280.
3. INCLUDE WITH EACH KIT ONE PRINT, P/N 146653-868.
4. THE A24 PRINTCON CHIP MUST BE IN ONE OF THE LOCATIONS SHOWN.
5. PRINTCON CHIPS HAVE BEEN ADDED FOR OLIVETTI & EPSON PRINTERS. SEE INSTALLATION INSTRUCTIONS. P/N 129361-089 TO DETERMINE TYPE OF PRINTER ON STERILIZER.

OLIVETTI P/NS:	EPSON P/NS:
129049-325	129049-409
129049-326	129049-410
129049-327	129049-411
56400-060	56400-136

6. LABEL VACUUM SWITCH 'VS23', ITEM 6, WITH BRADY TYPE MARKERS, BLACK LETTERS ON YELLOW BACKGROUND.
7. WIRE SPEC: #22 AWG STRANDED COPPER, 19/34 STRANDING, 300 VOLT, 105°C, TEFLON INSULATION, UL/CSA LABELS REQ'D, 48" LONG.

7/03-09-92920052

TOLERANCE STANDARD UNLESS OTHERWISE NOTED	FRACTIONAL ±1/64 ANGULARITY ±1°	DECIMAL ±.005 MACH. SURF.

3	9-06-89	RA #49	6	02-10-92920034	
2	6-20-89	RA #3	5	11-14-91910211	
1	6-01-89	RA #20	4	10-08-90900200	
0	4-28-89	PER #2	4	10-08-90 RA#168	

SCALE 7/32

AMERICAN STERILIZER COMPANY ERIE, PENNSYLVANIA

TITLE: ETO DISPOSER KIT ASS'Y 20" PRINTCON

FIRST MADE FOR:

AMSCO

146653-868 | 11"3

CAD DWG.

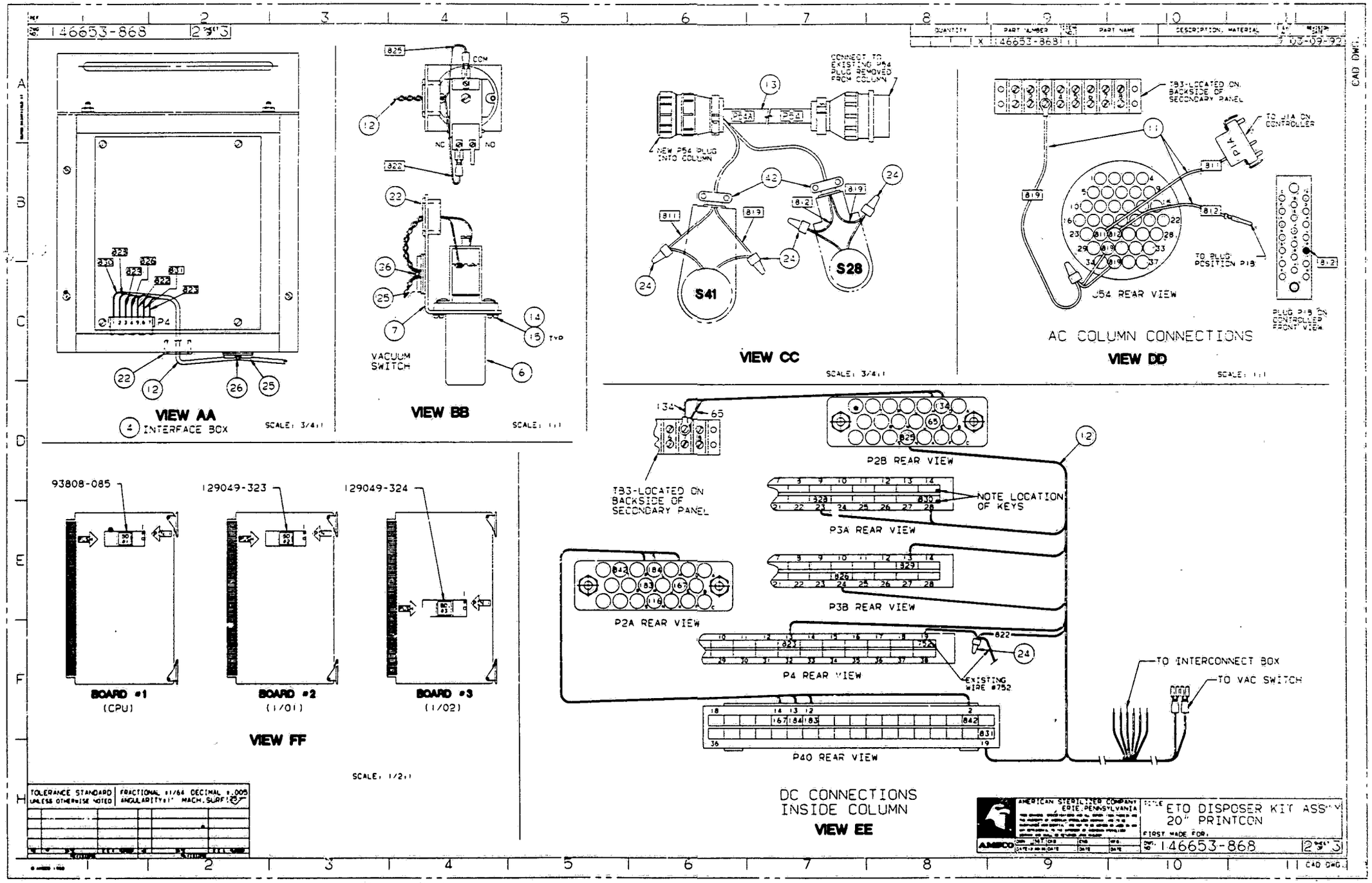
146653-868
QUANTITY
PART NUMBER
PART NAME
DESCRIPTION, MATERIAL
146653-868
VIEW AA
4 INTERFACE BOX
SCALE: 3/4:1
COM
NC
NO
VACUUM SWITCH
VIEW BB
SCALE: 1:1
CONNECT TO EXISTING P54 PLUG REMOVED FROM COLUMN
NEW P54 PLUG INTO COLUMN
S41
S28
VIEW CC
SCALE: 3/4:1
TB3-LOCATED ON BACKSIDE OF SECONDARY PANEL
TO J1A ON CONTROLLER
TO PLUG POSITION P18
J54 REAR VIEW
PLUG P18 ON CONTROLLER FRONT VIEW
AC COLUMN CONNECTIONS
VIEW DD
SCALE: 1:1
93808-085
129049-323
129049-324
BOARD #1 (CPU)
BOARD #2 (1/01)
BOARD #3 (1/02)
VIEW FF
SCALE: 1/2:1
TB3-LOCATED ON BACKSIDE OF SECONDARY PANEL
P2B REAR VIEW
NOTE LOCATION OF KEYS
P3A REAR VIEW
P3B REAR VIEW
P2A REAR VIEW
P4 REAR VIEW
EXISTING WIRE #752
P40 REAR VIEW
TO INTERCONNECT BOX
TO VAC SWITCH
DC CONNECTIONS INSIDE COLUMN
VIEW EE
TOLERANCE STANDARD UNLESS OTHERWISE NOTED
FRACTIONAL ±1/64 DECIMAL ±.005
ANGULARITY ±1° MACH. SURF. 125
AMERICAN STERILIZER COMPANY ERIE, PENNSYLVANIA
AMSCO
TITLE ETO DISPOSER KIT ASS'Y 20" PRINTCON
FIRST MADE FOR:
146653-868
CAD DWG.

146653-868 | 3 SHEET 3

QUANTITY	PART NUMBER	ITEM NO.	PART NAME	DESCRIPTION, MATERIAL	REV	REVISION DATE
X	146653-868	1			17	03-09-92

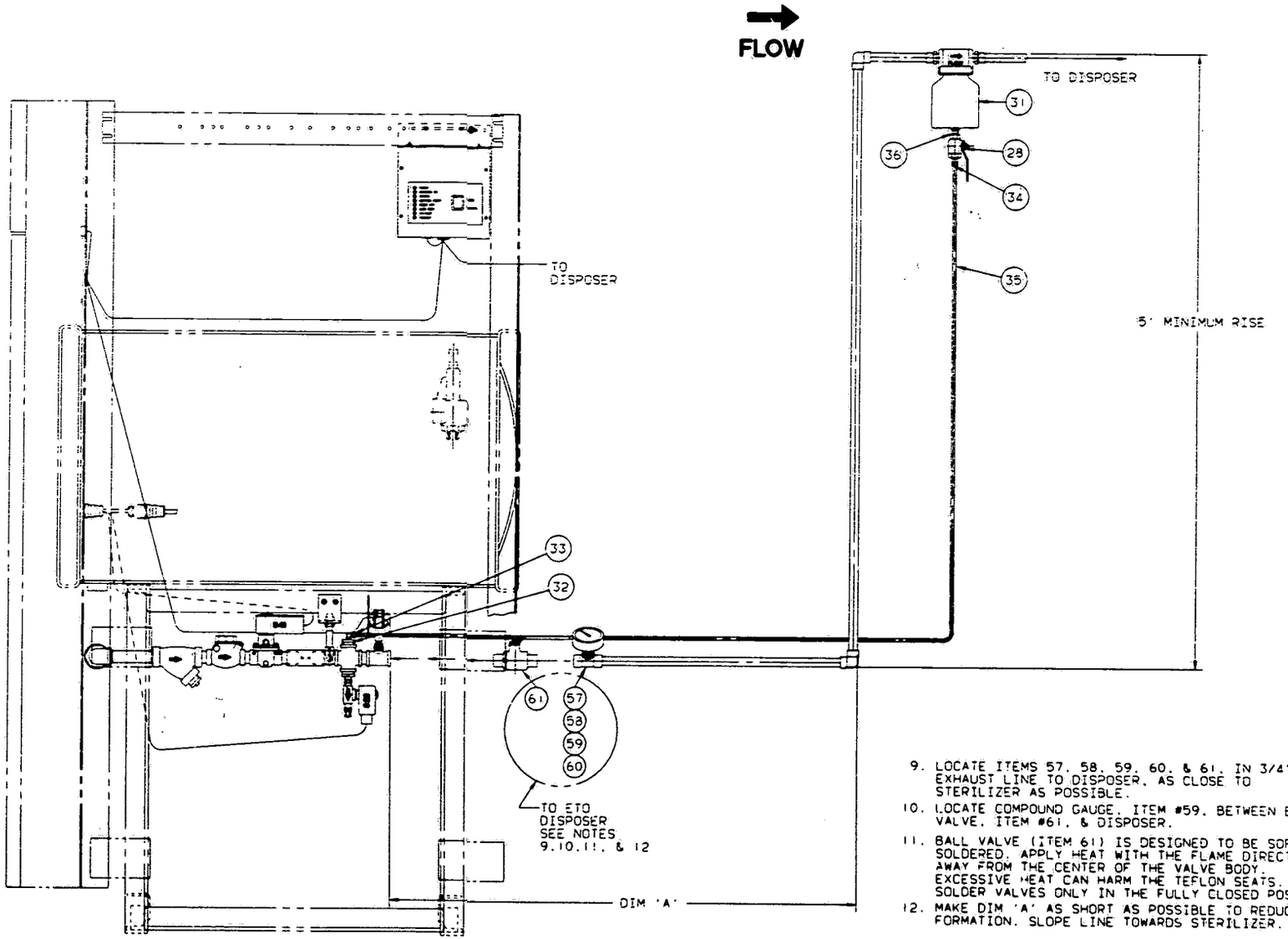

9. LOCATE ITEMS 57, 58, 59, 60, & 61, IN 3/4" EXHAUST LINE TO DISPOSER, AS CLOSE TO STERILIZER AS POSSIBLE.
10. LOCATE COMPOUND GAUGE, ITEM #59, BETWEEN BALL VALVE, ITEM #61, & DISPOSER.
11. BALL VALVE (ITEM 61) IS DESIGNED TO BE SOFT SOLDERED. APPLY HEAT WITH THE FLAME DIRECTED AWAY FROM THE CENTER OF THE VALVE BODY. EXCESSIVE HEAT CAN HARM THE TEFLON SEATS. SOLDER VALVES ONLY IN THE FULLY CLOSED POSITION.
12. MAKE DIM 'A' AS SHORT AS POSSIBLE TO REDUCE WATER FORMATION. SLOPE LINE TOWARDS STERILIZER.

TOLERANCE STANDARD UNLESS OTHERWISE NOTED | FRACTIONAL ±1/64 DECIMAL ±.005 ANGULARITY ±1° MACH. SURF 125

AMSCO — AMERICAN STERILIZER COMPANY ERIE, PENNSYLVANIA

TITLE: ETO DISPOSER KIT ASS'Y 20" PRINTCON

FIRST MADE FOR:

DWG NO: 146653-868 | 3 SHEET 3

CAD DWG.

E- 1

E- 2

DWG. NO. 136806-983 | SHEET 1 OF 1

QUANTITY			PART NUMBER	ITEM NO.	PART NAME	DESCRIPTION, MATERIAL	REV NO.	REVISION DATE
		X	136806-983	1	VALVE ASSY	20" PRINTCON/IRC GAS	4	11-01-91
	1		83228-002	2	VALVE, SOL.	3/4" NPT		
	1		150828-444	3	VALVE, CHECK	3/4" NPT		
	1		129360-765	4	ORIFICE,FL.CONT.	3/4" NPT X 7/64"DIA ID		
	1		4932-091	5	TEE	3/4" NPT		
	1		84327-001	6	TEE, REDUCING	3/4" X 3/4" X 1/4"		
	1		89986-091	7	ELL, UNION	3/4" NPT		
	1		3443-091	8	PLUG, PIPE	3/4" NPT		
	2		3439-091	9	PLUG, PIPE	1/8" NPT		
	1		29293-091	10	NIPPLE, BRASS	3/4" NPT X 1 3/4" LG.		
	5		29291-091	11	NIPPLE, BRASS	3/4" NPT X 1 1/4" LG.		
	1		29307-091	12	NIPPLE, BRASS	3/4" NPT X 5 1/4" LG.		
	1		28899-091	13	NIPPLE, BRASS	1/8" NPT X 1" LG.		
	1		1345-091	14	CROSS	3/4" NPT		
	1		22472-091	15	BUSHING, RED.	3/4" NPT X 1/4"NPT		
	1		150822-934	16	VALVE, SOLENOID	1/4" NPT		
	1		939-091	17	BUSHING, RED.	1/4" NPT X 1/8" NPT		
	1		77774-091	18	STRAINER,NIPPLE	1/4" NPT		
	1		47708-091	19	STRAINER	3/4" NPT		
	1		34218-091	20	FITTING,STR.COMP	1/4" ODT X 1/4" NPT		

NOTES:

1. USE PIPE SEALANT PER AMSCO DWG. 150822-020 ON ALL THREADED PIPE JOINTS.
2. LABEL VALVES AS SHOWN WITH BRADY TYPE MARKERS. BLACK LETTERS ON YELLOW BACKGROUND.

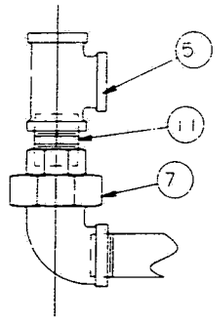

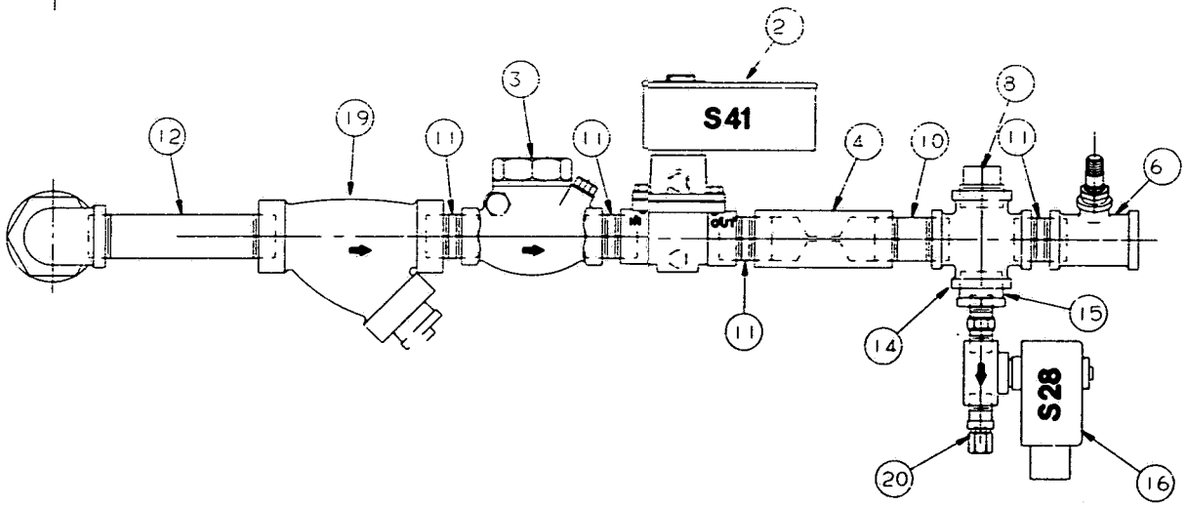

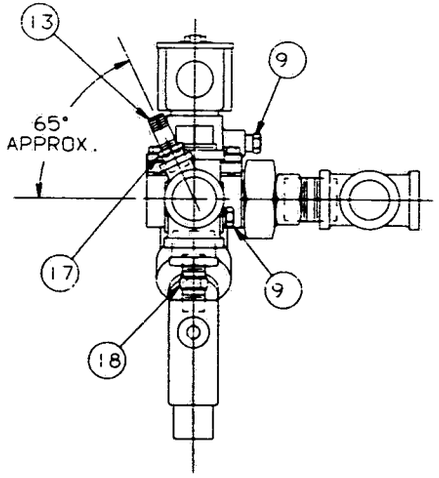

SCALE 1/2 1

TOLERANCE STANDARD UNLESS OTHERWISE NOTED	FRACTIONAL ±1/64 DECIMAL ±.005 ANGULARITY:1° MACH. SURF 125

NO.	DATE	E.C.A. NUMBER	NO.	DATE	E.C.A. NUMBER
3	07-19-90	900129			
2	11-28-89	RA #84			
1	06-15-89	RA #24	4	11-01-91	910211
0	04-28-89	PER #2	3	07-19-90	900200

REVISIONS

© AMSCO 1988

AMERICAN STERILIZER COMPANY
ERIE, PENNSYLVANIA

THIS DRAWING, SPECIFICATIONS AND ALL INFORMATION THEREIN ARE THE PROPERTY OF AMERICAN STERILIZER COMPANY AND TO BE REGARDED CONFIDENTIAL. AND NOT TO BE COPIED OR USED IN ANY DETRIMENTAL TO THE INTEREST OF AMERICAN STERILIZER COMPANY AND SHALL BE RETURNED UPON REQUEST

AMSCO

DWN	CKD	ENG	MFG
JMT	JMT	MEC	SDN
DATE 07-28-88	DATE 4-28-89	DATE 5-2-89	DATE 5-3-89

TITLE VALVE ASSEMBLY - 20" GAS PRINT. OR IRC W/DISPOSER

FIRST MADE FOR: 146653-868

DWG. NO. 136806-983 | SHEET 1 OF 1

CAD DWG.

REF 146655-119, 146655-118

DWG. NO. 146655-120 | SHEET 3 OF 4

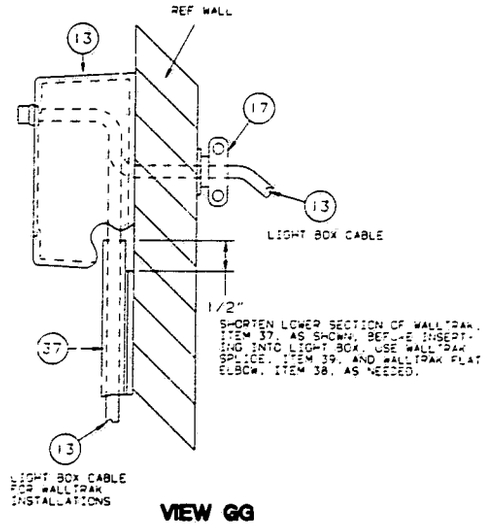

VIEW GG

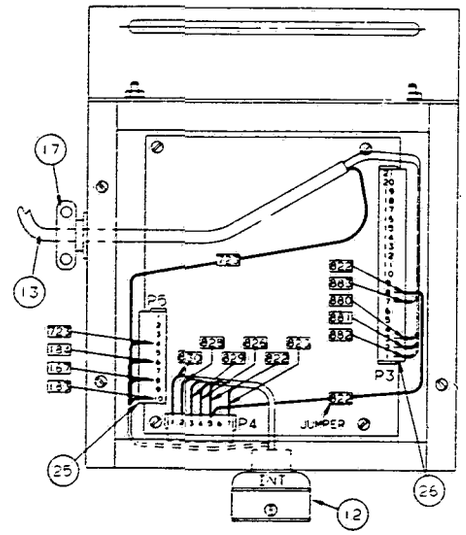

VIEW AA

(4) INTERFACE BOX

SCALE: 3/4:1

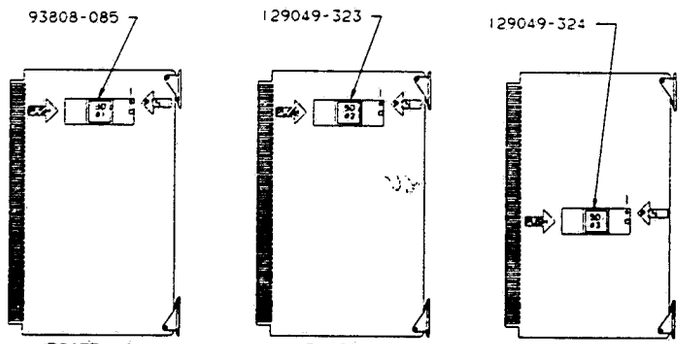

BOARD #1 (CPU)

BOARD #2 (I/O1)

BOARD #3 (I/O2)

VIEW FF

NOTES:

1. USE PIPE SEALANT PER AMSCO DWG. 150822-020 ON ALL THREADED PIPE JOINTS.
2. COPPER TUBING .030 WALL X 1/4" OD. SOFT ANNEALED. ASTM B280.
3. INCLUDE WITH EACH KIT ONE PRINT. P/N 146655-120.
5. LABEL VACUUM SWITCHES 'VS10' AND 'VS23', ITEM 6, WITH MARKERS. BLACK LETTERS ON YELLOW BACKGROUND.
6. WIRE SPEC: #22 AWG STRANDED COPPER. 19/34 STRANDING. 300 VOLT. 105°C., TEFLON INSULATION. UL/CSA LABELS REQ'D. 48" LONG.

SCALE: 1/2:1

QUANTITY		PART NUMBER	ITEM NO.	PART NAME	DESCRIPTION, MATERIAL	REV NO.	REVISION DATE
	X	146655-120	1	DISPOSER KIT	24 X 36 IRC EAGLE 2000	B	03-17-92
	1	136807-661	2	VALVE ASS'Y	S41, S42, S28		
	1	146655-121	3	SCHEMATIC, ELEC.	REF. DWG.		
	1	136806-997	4	BOX, INTERFACE			
	1	129361-107	5	INSTALL. INST.	REF. DWG.		
5	2	83866-001	6	SWITCH, VAC	VS10, VS23		
	2	93909-980	7	BRKT, VAC SW.			
	1	150822-296	8	SUPPORT, PIPE	1/4" NPT X 5 1/4" LG.		
	1	93910-143	9	BRKT, PIPE SPT.			
	1	39590-010	10	CLAMP, PIPE	1/4" NPT		
	1	136807-665	11	CABLE ASS'Y, AC			
	1	136807-666	12	CABLE ASS'Y, DC			
	1	93910-135	13	LIGHT BOX ASS'Y			
	8	3984-041	14	SCREW, RD.HD.	#6-32 X 3/8" LG.		
	8	19675-041	15	LOCKWASHER	#6		
	1	93617-001	16	JUNCTION BOX			
	2	91354-045	17	CLAMP, CORD			
	2	93829-001	18	HOUSING, PLUG	P1A, P2A		
	4	9374-041	19	SCREW, RD.HD.	#10-32 X 3/8" LG.		
	4	81682-006	20	LOCKWASHER	#10		
	8	3949-042	21	SCREW, RD.HD.	1/4-20 X 3/4"LG		
	8	129359-533	22	NUT, KEPS	1/4-20		
	8	150473-295	23	WASHER, FLAT	.281 ID X.625 OD X.063 THK		
	12	18538-091	24	NUT, WIRE			
	1	129361-022	25	PLUG, 10 POS	P5		
	1	129361-023	26	PLUG, 21 POS	P3		
	1	93910-652	27	ASSEMBLY	PROGRAMMED CHIPS		
	1	93910-653	28	TRAP, WATER			
	1	28899-091	29	NIPPLE, BRASS	1/8 NPT X 1"		
	1	45407-091	30	ELL, COMP.	1/4 NPT X 1/4 ODT		
	2	34218-091	31	FITTING, STR.	1/4 OD X 1/4" NPT		
	1		32	TUBING, COPPER	1/4" OD X .156" LG. SEE NOTE #2		
	1	33319-091	33	NIPPLE, BRASS	3/4"NPT X 17 1/2"LG		
	2	150828-689	34	NUT, LOCK	1/4-18 NPSL		
	2	52148-045	35	LOCKWASHER	9/16" ID		
3	1		36		REF PRINT P/N 146655-120		
	2	129361-115	37	WALLTRAK	5' LG.		
	2	129361-116	38	FLAT ELBOW	WALLTRAK		
	2	129361-117	39	SPLICE	WALLTRAK		
	2	150822-003	40	TIE MARKER	LABEL P1A, P2A		
	1	21990-091	41	ELBOW, COMP.	1/4 ODT X 1/8" NPT		
	1	42581-091	42	TEE, COMP.	1/4 ODT X 1/4 ODT X 1/8" NPT		
	1	150828-475	43	VALVE, SAFETY	1/2" NPT		
	1	129361-124	44	EQUIPMENT MANUAL	REF. DWG.		
	1	93910-145	45	WIRING CONNECTIONS	DISPOSER - REF. DWG.		
	1	836-042	46	BUSHING, RED.	3/4 X 1/2		
	1	44500-091	47	ELL, 90°	SOLDER JOINT FITTING		
	1	84205-001	48	HOUSING, PIN	P3A		
	2	84192-001	49	JACKSCREW	FEMALE, P3A		
	2	3439-091	50	PIPE PLUG	1/8 NPT		
	1	146581-004	51	MOTHERBOARD ASSEMBLY			
	1	146590-058	52	PC BOARD			
	1	146645-226	53	CONTROL, PRIMARY			
	1		54	WIRE	#22 AWG BLACK, SEE NOTE #6		
	1	129352-535	55	HOUSING	CONNECTOR, 3 POS. P13		
	2	84187-003	56	SOCKET	CONTACT		
	2	84207-002	57	PIN, CONTACT			
	1	83528-001	58	I.D. LOCKING TAB			
	2	84225-001	59	CARD GUIDE			
	3	84226-001	60	LOCKING TAB			
	1	150828-262	61	VALVE, CHECK			
	1	45589-091	62	COUPLING	1/4 NPT		
	1	939-091	63	BUSHING, RED.	1/4 NPT X 1/8 NPT		
	1	76053-091	64	BUSHING, RED.	1/2 NPT X 1/4 NPT		
	1	90525-091	65	GAUGE	1/8 NPT		
	1	129356-508	66	TEE, SOLDER	3/4 X 3/4 X 1/2 NPT		
	1	93910-642	67	VALVE, BALL	3/4 SOLDER		
	1	764317-524	68	TAPE, TEFLON			
	1	129362-980	70	GUIDELINES, DISP.			
	1	146657-256	71	SCHEMATIC			
	1	150822-048	72	VALVE, BALL			
	1	28917-091	73	NIPPLE, BRASS			

CAD DWG.

TOLERANCE STANDARD UNLESS OTHERWISE NOTED	FRACTIONAL ±1/64 ANGULARITY±1°	DECIMAL ±.005 MACH. SURF 125

3	1-17-90	PA 99	6	11-11-91	B1021			
2	9-05-89	PA 48	5	10-08-90	900200			
1	8-20-89	PA 30	5	10-08-90	PA#171	8	03-13-92	920052
0	6-7-89	PER 19	4	02-12-90	PA#108	7	02-10-92	920034

AMSCO — AMERICAN STERILIZER COMPANY, ERIE, PENNSYLVANIA

TITLE: ETO DISPOSER KIT ASSY 24X36 IRC EAGLE 2000

FIRST MADE FOR:

DWG. NO. 146655-120 | SHEET 3 OF 4

CAD DWG.

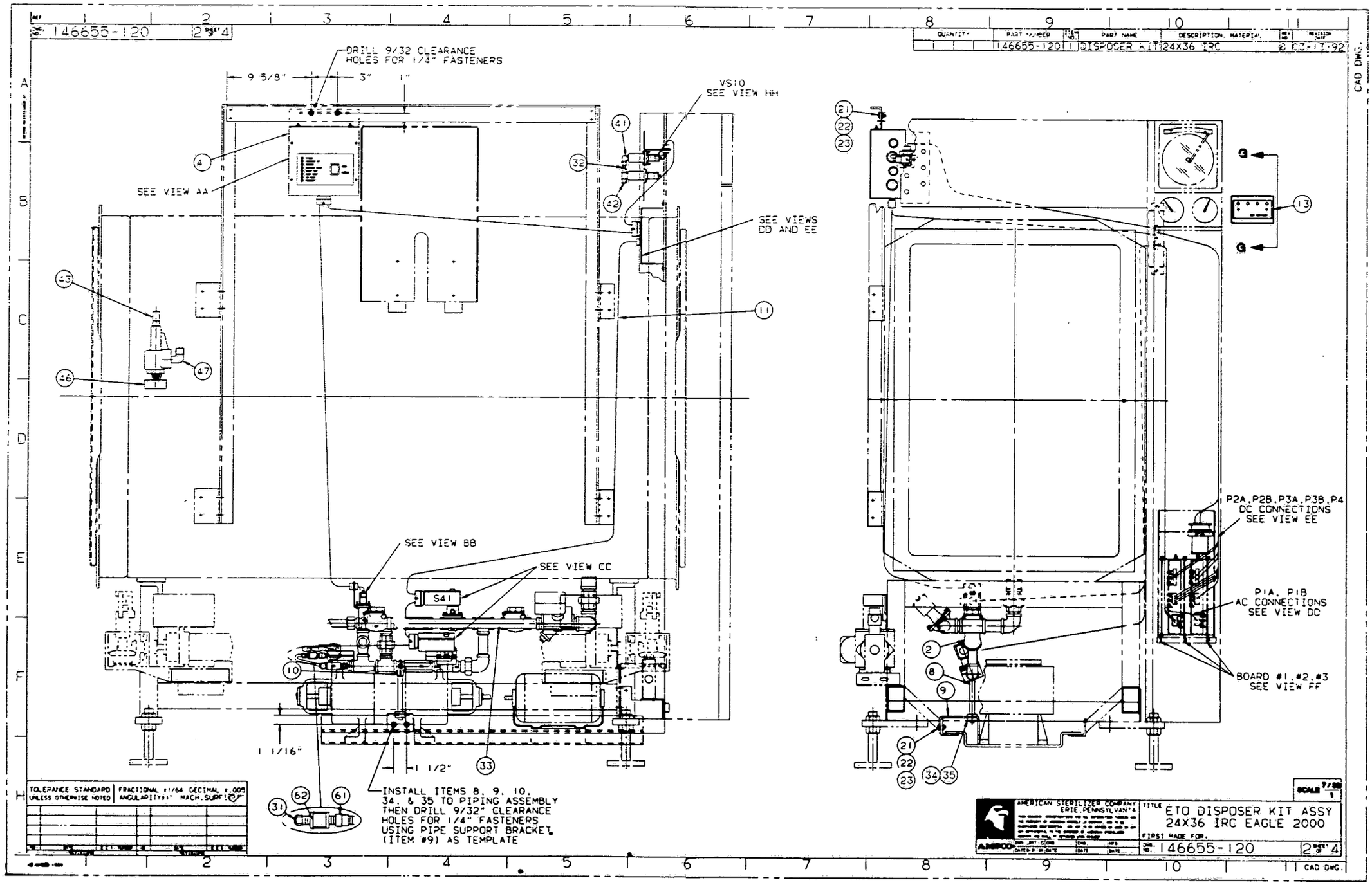
146655-120
DRILL 9/32 CLEARANCE HOLES FOR 1/4" FASTENERS
9 5/8"
3"
1"
VS10 SEE VIEW HH
SEE VIEW AA
SEE VIEWS DD AND EE
SEE VIEW BB
SEE VIEW CC
S41
1 1/16"
1 1/2"
INSTALL ITEMS 8, 9, 10, 34, & 35 TO PIPING ASSEMBLY THEN DRILL 9/32" CLEARANCE HOLES FOR 1/4" FASTENERS USING PIPE SUPPORT BRACKET (ITEM #9) AS TEMPLATE
P2A, P2B, P3A, P3B, P4 DC CONNECTIONS SEE VIEW EE
P1A, P1B AC CONNECTIONS SEE VIEW DC
BOARD #1, #2, #3 SEE VIEW FF
QUANTITY
PART NUMBER
PART NAME
DESCRIPTION, MATERIAL
146655-120
DISPOSER KIT 24X36 IRC
TOLERANCE STANDARD UNLESS OTHERWISE NOTED
FRACTIONAL ±1/64 DECIMAL ±.005 ANGULARITY±1° MACH. SURF.
AMERICAN STERILIZER COMPANY ERIE, PENNSYLVANIA
TITLE
ETO DISPOSER KIT ASSY 24X36 IRC EAGLE 2000
FIRST MADE FOR
146655-120
CAD DWG.

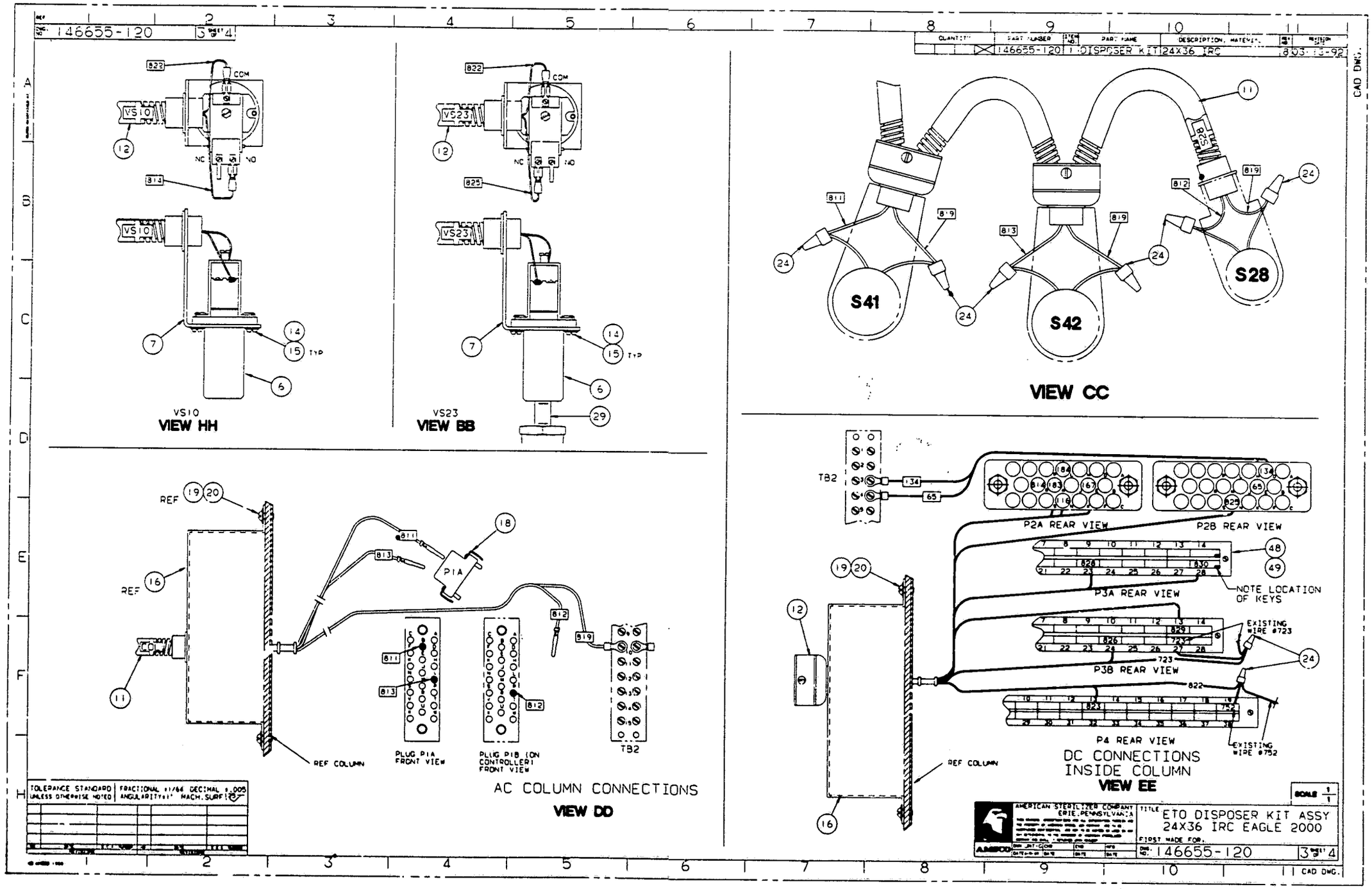
146655-120
3 SHEET 4
QUANTITY | PART NUMBER | ITEM NO. | PART NAME | DESCRIPTION, MATERIAL | REV | REVISION DATE
146655-120 | 1 | DISPOSER KIT 24X36 IRC | 8/03/93
CAD DWG.
VS10
VIEW HH
VS23
VIEW BB
COM
NC
NO
TYP
VIEW CC
S41
S42
S28
TB2
P2A REAR VIEW
P2B REAR VIEW
P3A REAR VIEW
NOTE LOCATION OF KEYS
P3B REAR VIEW
EXISTING WIRE #723
P4 REAR VIEW
EXISTING WIRE #752
DC CONNECTIONS INSIDE COLUMN
VIEW EE
REF
REF COLUMN
P1A
PLUG P1A FRONT VIEW
PLUG P1B (ON CONTROLLER) FRONT VIEW
AC COLUMN CONNECTIONS
VIEW DD
TOLERANCE STANDARD UNLESS OTHERWISE NOTED
FRACTIONAL ±1/64 DECIMAL ±.005
ANGULARITY ±1° MACH. SURF 125
SCALE 1/1
AMERICAN STERILIZER COMPANY ERIE, PENNSYLVANIA
TITLE
ETO DISPOSER KIT ASSY 24X36 IRC EAGLE 2000
FIRST MADE FOR:
DWG. NO. 146655-120
3 SHEET 4
CAD DWG.

146655-120 | 4 of 4

QUANTITY	PART NUMBER	ITEM NO.	PART NAME	DESCRIPTION, MATERIAL	REV.
	146655-120	1	DISPOSER KIT	24X36 IRC	3 03-13-92

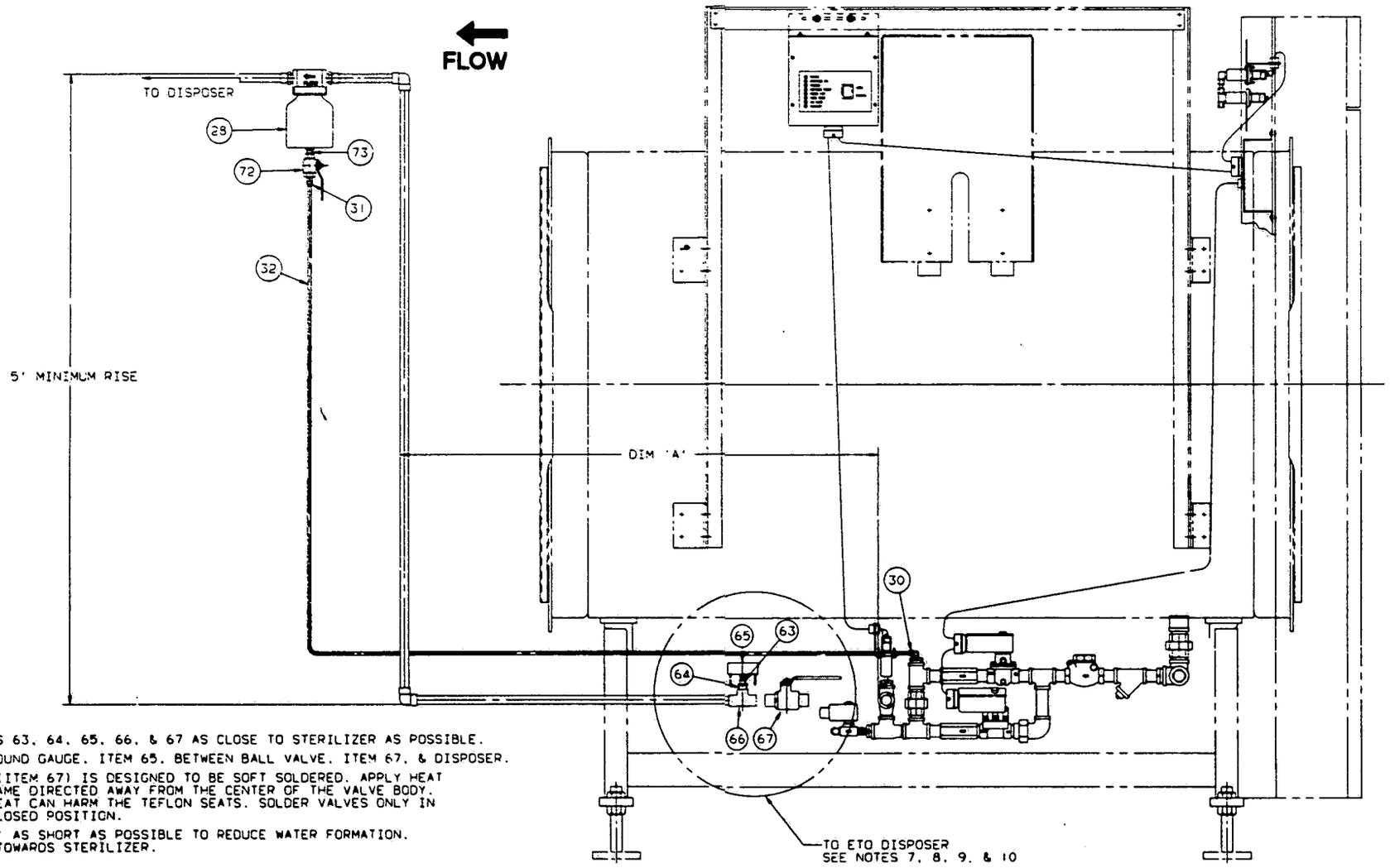

7. LOCATE ITEMS 63, 64, 65, 66, & 67 AS CLOSE TO STERILIZER AS POSSIBLE.
8. LOCATE COMPOUND GAUGE, ITEM 65, BETWEEN BALL VALVE, ITEM 67, & DISPOSER.
9. BALL VALVE (ITEM 67) IS DESIGNED TO BE SOFT SOLDERED. APPLY HEAT WITH THE FLAME DIRECTED AWAY FROM THE CENTER OF THE VALVE BODY. EXCESSIVE HEAT CAN HARM THE TEFLON SEATS. SOLDER VALVES ONLY IN THE FULLY CLOSED POSITION.
10. MAKE DIM 'A' AS SHORT AS POSSIBLE TO REDUCE WATER FORMATION. SLOPE LINE TOWARDS STERILIZER.

TOLERANCE STANDARD UNLESS OTHERWISE NOTED | FRACTIONAL ±1/64 DECIMAL ±.005 ANGULARITY ±1° MACH. SURF. 125

AMERICAN STERILIZER COMPANY
ERIE, PENNSYLVANIA

TITLE ETO DISPOSER KIT ASSY
24X36 IRC EAGLE 2000

FIRST MADE FOR:

DWG. NO. 146655-120 | 4 of 4

SCALE 1/8 : 1

CAD DWG.

146655-118 | PAGE 4

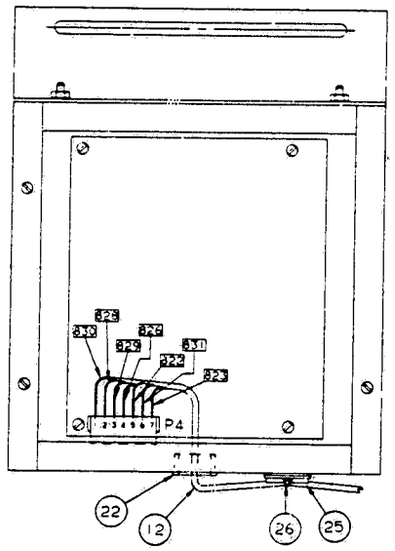

VIEW AA
(4) INTERFACE BOX
SCALE: 3/4:1

NOTES:

1. USE PIPE SEALANT PER AMSCO DWG. 150822-020 ON ALL THREADED PIPE JOINTS.
2. COPPER TUBING .030 WALL X 1/4" OD. SOFT ANNEALED. ASTM B280.
3. INCLUDE WITH EACH KIT ONE PRINT. P/N 146655-118.
5. LABEL VACUUM SWITCH VS23, ITEM 6, WITH BRADY MARKER. BLACK LETTERS ON YELLOW BACKGROUND.
6. IF NO GAS DETECTOR OR AIR FLOW SWITCH ON ENVIROGUARD CONNECT AS SHOWN. IF THESE ITEMS ARE PRESENT, REMOVE WIRES #134 & #65 FROM DC CABLE AND DISREGARD.
7. WIRE SPEC: #22 AWG STRANDED COPPER, 19/34 STRANDING, 300 VOLT, 105°C., TEFLON INSULATION, UL/CSA LABELS REQ'D, 48" LONG.
8. PRINTCON CHIPS HAVE BEEN ADDED FOR OLIVETTI & EPSON PRINTERS. SEE INSTALLATION INSTRUCTIONS P/N 129361-089 TO DETERMINE TYPE OF PRINTER ON STERILIZER.

OLIVETTI P/NS:	EPSON P/NS:
129049-325	129049-409
129049-326	129049-410
120049-327	120049-411
56400-060	56400-136

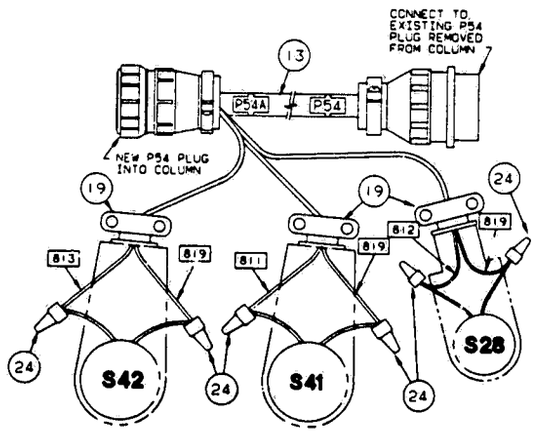

VIEW CC
SCALE: 3/4:1

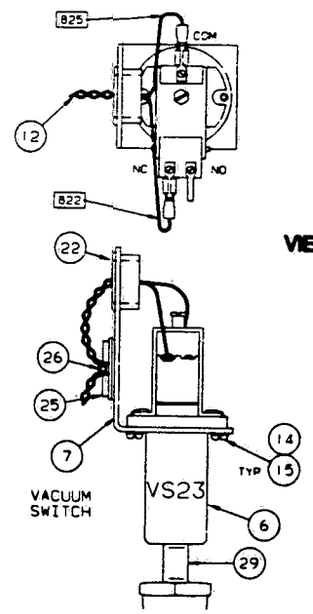

VIEW BB
SCALE: 1:1

QUANTITY	PART NUMBER	ITEM NO.	PART NAME	DESCRIPTION, MATERIAL	REV NO.	REVISION DATE
	146655-118	1	DISPOSER KIT	24 X 36 PRINTCON	1	03-09-92
1	136807-661	2	VALVE ASS'Y	S41, S42		
1	146653-873	3	SCHEMATIC, ELEC.	REF. DWG.		
1	136806-997	4	BOX, INTERFACE			
1	129361-089	5	INSTALL. INST.	REF. DWG.		
1	83866-001	6	SWITCH, VAC			
1	93909-980	7	BRKT. VAC SW.			
1	150822-296	8	SUPPORT, PIPE	1/4 NPT X 5 1/4" LG.		
1	93910-143	9	BRKT. PIPE SPT.			
1	39590-010	10	CLAMP, PIPE	1/4" NPT		
1	136807-663	11	HARNESS, WIRE	AC		
1	136807-664	12	CABLE, DC			
1	136807-662	13	CABLE, AC			
4	3984-041	14	SCREW, RD.HD.	#6-32 X 3/8" LG.		
4	19675-041	15	LOCKWASHER	#6		
8	3949-042	16	SCREW, RD.HD.	1/4-20 X 3/4" LG.		
8	150473-295	17	WASHER, FLAT	.281 ID X .625 OD X .063 THK		
8	129359-533	18	NUT, KEPS.	1/4-20		
3	91354-045	19	CLAMP, CABLE			
1	33319-091	20	NIPPLE, BRASS	3/4" NPT X 17 1/2" LG		
1	836-042	21	BUSHING, RED.	3/4" X 1/2		
3	76262-091	22	BUSHING, SNAP			
1	150828-262	23	VALVE, CHECK			
6	18538-091	24	NUT, WIRE			
4	129326-001	25	MOUNT, HARNESS			
6	84104-001	26	TIE, WIRE			
1	93910-651	27	ASSEMBLY	PROGRAMMED CHIPS		
		28				
1	28899-091	29	NIPPLE, BRASS	1/8 NPT X 1"		
1	129362-980	30	GUIDELINES, DIP.			
1	93910-653	31	TRAP, WATER			
		32				
		33				
1	45407-091	33	ELL, COMP.	1/4 NPT X 1/4 ODT		
2	34218-091	34	FITTING, STR.	1/4 OD X 1/4" NPT		
1		35	TUBING, COPPER	1/4" OD X 144" LG. SEE NOTE #2		
		36				
2	150828-689	37	NUT, LOCK	1/4-18 NPSL		
2	52148-045	38	LOCKWASHER	9/16" ID		
1		39		REF. PRINT P/N 146655-118		
1	150828-475	40	VALVE, SAFETY	1/2 NPT		
1	129361-123	41	EQUIPMENT MANUAL	REF. DWG.		
1	93910-145	42	WIRING CONNECTIONS	DISPOSER - REF. DWG.		
1	44500-091	43	ELL, 90°	SOLDER JOINT FITTING		
1	84205-001	44	HOUSING, PIN	P3A		
2	84192-001	45	JACKSCREW	FEMALE, P3A		
2	3439-091	46	PIPE PLUG	1/8 NPT		
1		47	WIRE	#22 AWG BLACK, SEE NOTE #7		
1	129352-535	48	HOUSING	CONNECTOR, 3 POS, P13		
2	84187-003	49	SOCKET	CONTACT		
2	84207-002	50	PIN, CONTACT			
1	83528-001	51	I.D. LOCKING TAB			
2	84225-001	52	CARD GUIDE			
3	84226-001	53	LOCKING TAB			
1	45589-091	54	COUPLING	1/4 NPT		
1	939-091	55	BUSHING, RED	1/4 NPT X 1/8 NPT		
1	76053-091	56	BUSHING, RED	1/2 NPT X 1/4 NPT		
1	90525-091	57	GAUGE	1/8 NPT		
1	129356-508	58	TEE, SOLDER	7/8 ODT X 7/8 ODT X 1/2 NPT		
1	93910-642	59	VALVE, BALL	7/8 ODT SOLDER		
1	764317-524	60	TAPE, TEFLON			
1	146657-255	61	SCHEMATIC			
1	150822-048	62	VALVE, BALL			
1	28917-091	63	NIPPLE, BRASS			
		64				

CAD DWG.

TOLERANCE STANDARD UNLESS OTHERWISE NOTED	FRACTIONAL ±1/64 DECIMAL ±.005 ANGULARITY ±1° MACH. SURF. 125

3	1-17-90	RA 98	6	11-19-91	910211			
2	9-06-89	RA 50	5	10-08-90	900200			
1	6-20-89	RA 28	5	10-08-90	RA#1698	3	03-09-92	920052
0	06-07-89	PER#19	4	02-12-90	RA#1067	1	02-10-92	920034

AMSCO — AMERICAN STERILIZER COMPANY, ERIE, PENNSYLVANIA

TITLE: ETO DISPOSER KIT ASS'Y 24 X 36 PRINTCON

FIRST MADE FOR:

DWG. NO. 146655-118 | PAGE 4

CAD DWG.

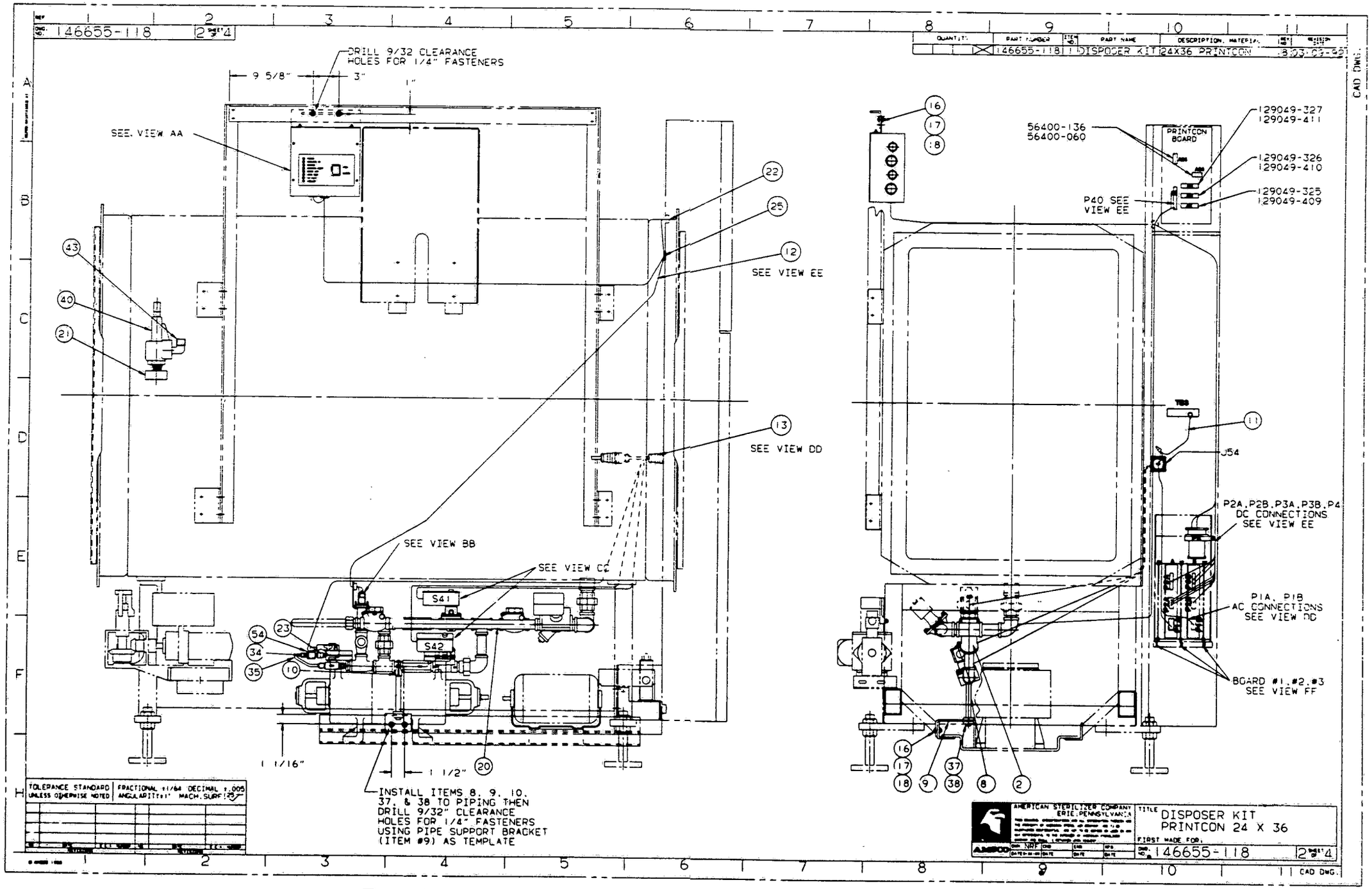
146655-118
2 SHEET 4
DRILL 9/32 CLEARANCE HOLES FOR 1/4" FASTENERS
9 5/8"
3"
1"
SEE VIEW AA
SEE VIEW EE
SEE VIEW DD
SEE VIEW BB
SEE VIEW CC
S41
S42
1 1/16"
1 1/2"
INSTALL ITEMS 8, 9, 10, 37, & 38 TO PIPING THEN DRILL 9/32" CLEARANCE HOLES FOR 1/4" FASTENERS USING PIPE SUPPORT BRACKET (ITEM #9) AS TEMPLATE
TOLERANCE STANDARD UNLESS OTHERWISE NOTED
FRACTIONAL ±1/64 DECIMAL ±.005
ANGULARITY ±1° MACH. SURF 125
QUANTITY
PART NUMBER
ITEM NO.
PART NAME
DESCRIPTION, MATERIAL
146655-118
DISPOSER KIT 24X36 PRINTCON
CAD DWG.
PRINTCON BOARD
56400-136
56400-060
129049-327
129049-411
129049-326
129049-410
129049-325
129049-409
P40 SEE VIEW EE
J54
P2A, P2B, P3A, P3B, P4 DC CONNECTIONS SEE VIEW EE
P1A, P1B AC CONNECTIONS SEE VIEW DD
BOARD #1, #2, #3 SEE VIEW FF
AMERICAN STERILIZER COMPANY ERIE, PENNSYLVANIA
TITLE
DISPOSER KIT
PRINTCON 24 X 36
FIRST MADE FOR
146655-118
2 SHEET 4

F- 1

F- 2

DWG NO. 146655-118 SHEET 3 OF 4

QUANTITY	PART NUMBER	ITEM NO.	PART NAME	DESCRIPTION, MATERIAL	REV NO.	REVISION DATE
1	146655-118	1	DISPOSER KIT	24X36 PRINTCON	1	03-09-92

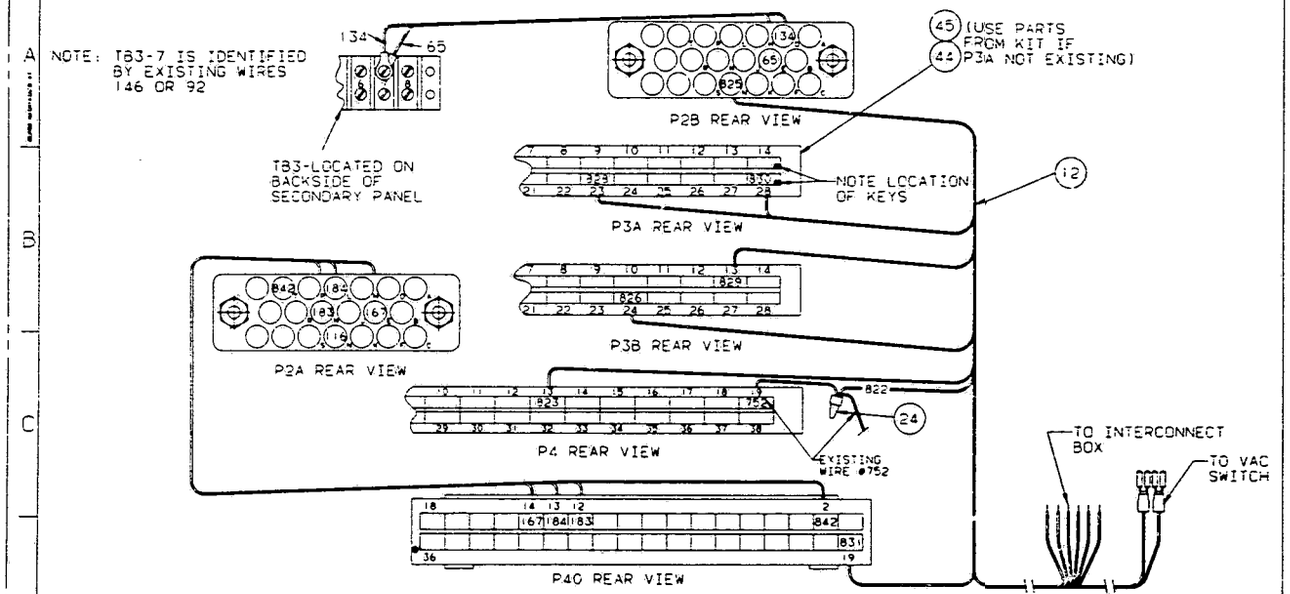

DC CONNECTIONS
INSIDE COLUMN

VIEW EE

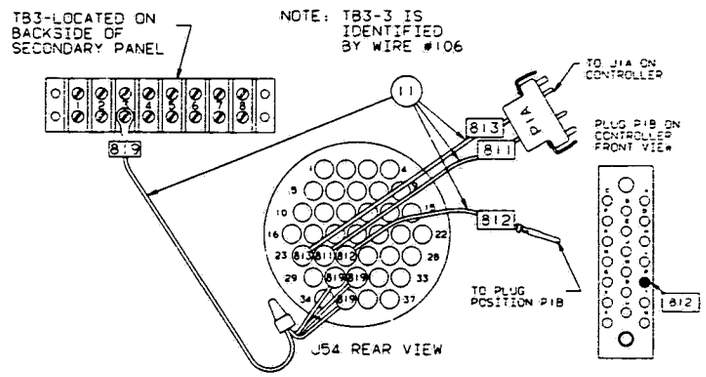

VIEW DD
AC COLUMN
CONNECTIONS

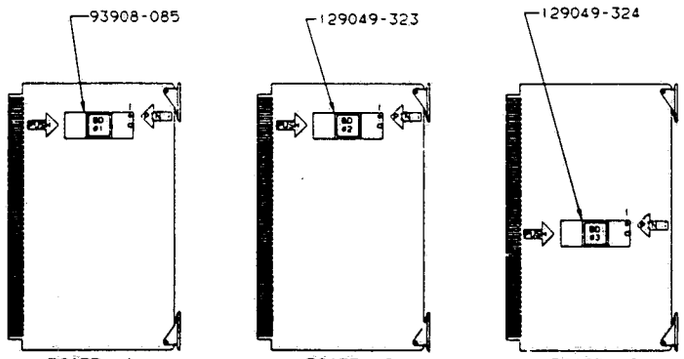

BOARD #1 (CPU)

BOARD #2 (I/O1)

BOARD #3 (I/O2)

VIEW FF

SCALE: 1/2:1

TOLERANCE STANDARD UNLESS OTHERWISE NOTED	FRACTIONAL ±1/64 DECIMAL ±.005 ANGULARITY±1° MACH. SURF.

AMSCO — AMERICAN STERILIZER COMPANY ERIE, PENNSYLVANIA

TITLE: ETO DISPOSER KIT ASS'Y 24 X 36 PRINTCON

FIRST MADE FOR:

DWG NO. 146655-118 SHEET 3 OF 4

CAD DWG.

DWG. NO. 146655-118 | 4 SHEET 4

QUANTITY			PART NUMBER	ITEM NO.	PART NAME	DESCRIPTION, MATERIAL	INIT.	REVISION DATE
		X	146655-118	1	DISPOSER KIT	24 X 36 PRINTCON	B	03-09-92

CAD DWG.

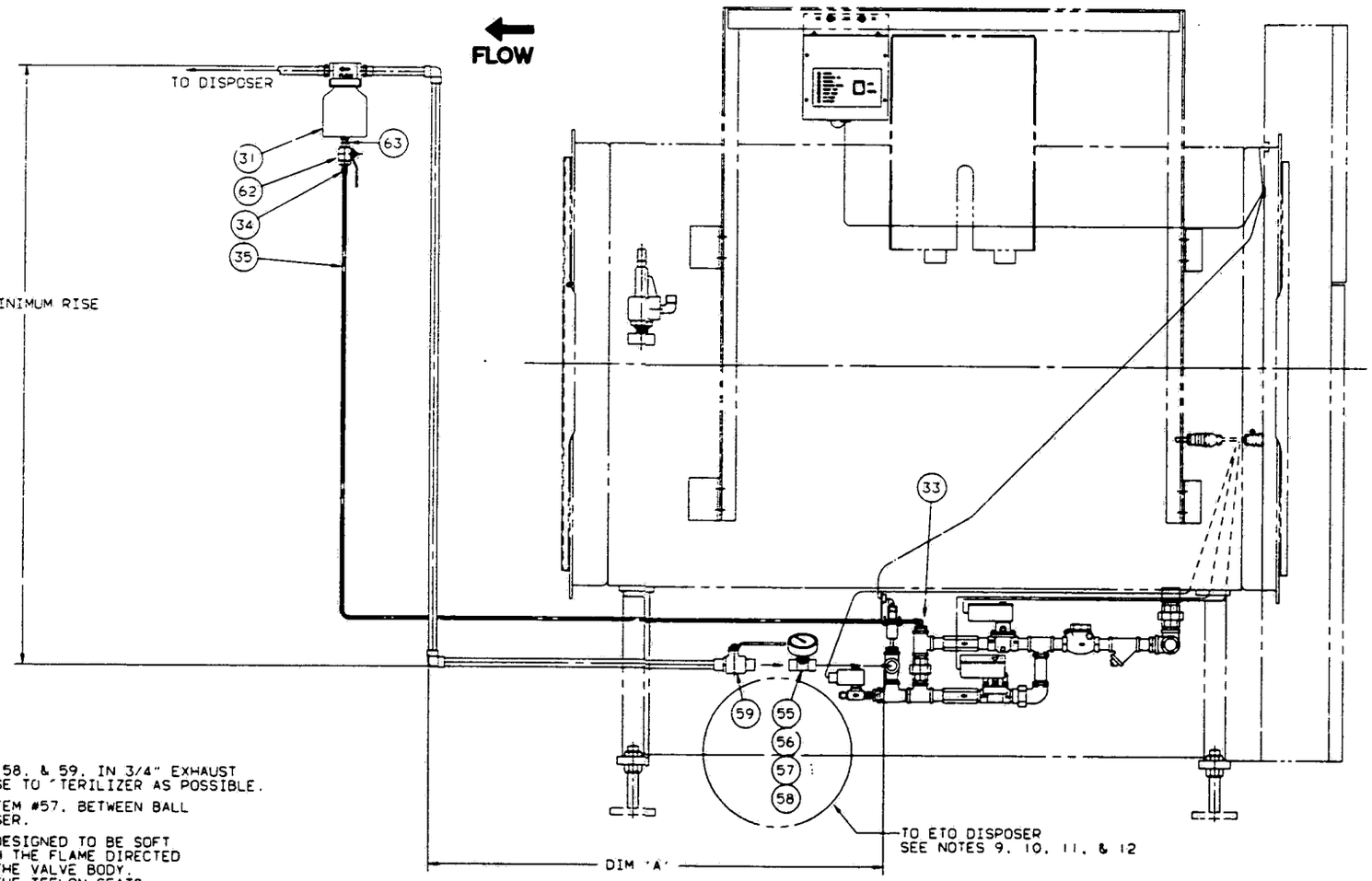

9. LOCATE ITEMS 55, 56, 57, 58, & 59, IN 3/4" EXHAUST LINE TO DISPOSER. AS CLOSE TO STERILIZER AS POSSIBLE.
10. LOCATE COMPOUND GAUGE, ITEM #57, BETWEEN BALL VALVE, ITEM #59, & DISPOSER.
11. BALL VALVE (ITEM 59) IS DESIGNED TO BE SOFT SOLDERED. APPLY HEAT WITH THE FLAME DIRECTED AWAY FROM THE CENTER OF THE VALVE BODY. EXCESSIVE HEAT CAN HARM THE TEFLON SEATS. SOLDER VALVES ONLY IN THE FULLY CLOSED POSITION.
12. MAKE DIM 'A' AS SHORT AS POSSIBLE TO REDUCE WATER FORMATION. SLOPE LINE TOWARDS STERILIZER.

TOLERANCE STANDARD UNLESS OTHERWISE NOTED	FRACTIONAL ±1/64 DECIMAL ±.005 ANGULARITY ±1° MACH. SURF

AMSCO — AMERICAN STERILIZER COMPANY, ERIE, PENNSYLVANIA

TITLE: ETO DISPOSER KIT ASS'Y 24 X 36 PRINTCON

FIRST MADE FOR:

DWG. NO. 146655-118 | 4 SHEET 4

CAD DWG.

DWG. NO. 136807-661 | SHEET 1 OF 1

QUANTITY	PART NUMBER	ITEM NO.	PART NAME	DESCRIPTION, MATERIAL	REV NO	REVISION DATE
X	136807-661	1	VALVE ASSY	24 X 36 UNITS	4	03-02-92
2	83228-002	2	VALVE, SOL.	3/4" NPT		
1	150822-934	3	VALVE, SOL.	1/4" NPT		
1	150828-444	4	VALVE, CHECK	3/4" NPT		
1	129360-765	5	ORIFICE,FL.CONT			
1	129361-121	6	ORIFICE,FL.CONT	3/4"NPT X .110 DIA ID		
1	3440-091	7	PLUG, PIPE	1/4" NPT		
4	3439-091	8	PLUG, PIPE	1/8" NPT		
6	29293-091	9	NIPPLE, BRASS	3/4" NPT X 1 3/4" LG.		
1	29299-091	10	NIPPLE, BRASS	3/4" NPT X 3 1/4" LG		
4	29290-091	11	NIPPLE, BRASS	3/4" NPT X 1" LG.		
1	29380-091	12	NIPPLE, BRASS	1" NPT X 1 1/4" LG		
1	29360-091	13	NIPPLE, BRASS	1" NPT X 3" LG.		
3	4932-091	14	TEE	3/4" NPT		
2	91918-091	15	TEE,STREET	3/4" NPT		
1	47708-091	16	STRAINER	3/4" NPT		
1	129232-001	17	UNION	3/4" NPT		
1		18				
1	45407-091	19	ELL, COMP	1/4" ODT X 1/4"NPT MALE		
1	841-042	20	BUSHING, REDUCING	1"NPT X 3/4"NPT		
2	22472-091	21	BUSHING, REDUCING	3/4"NPT X 1/4"NPT		
1	77774-091	22	NIPPLE,STRAINER	1/4"NPT		
1	89986-091	23	ELL,UNION	3/4" NPT		
1	4942-091	24	TEE	1" NPT		
1	11506-091	25	BUSHING, REDUCING	3/4"NPT X 1/8"NPT		
		26				
1	29296-091	27	NIPPLE, BRASS	3/4" NPT X 2"1/2LG.		

NOTES:

1. USE PIPE SEALANT PER AMSCO DWG. 150822-020 ON ALL THREADED PIPE JOINTS.
2. LABEL VALVES AS SHOWN WITH BRADY TYPE MARKERS. BLACK LETTERS ON YELLOW BACKGROUND.

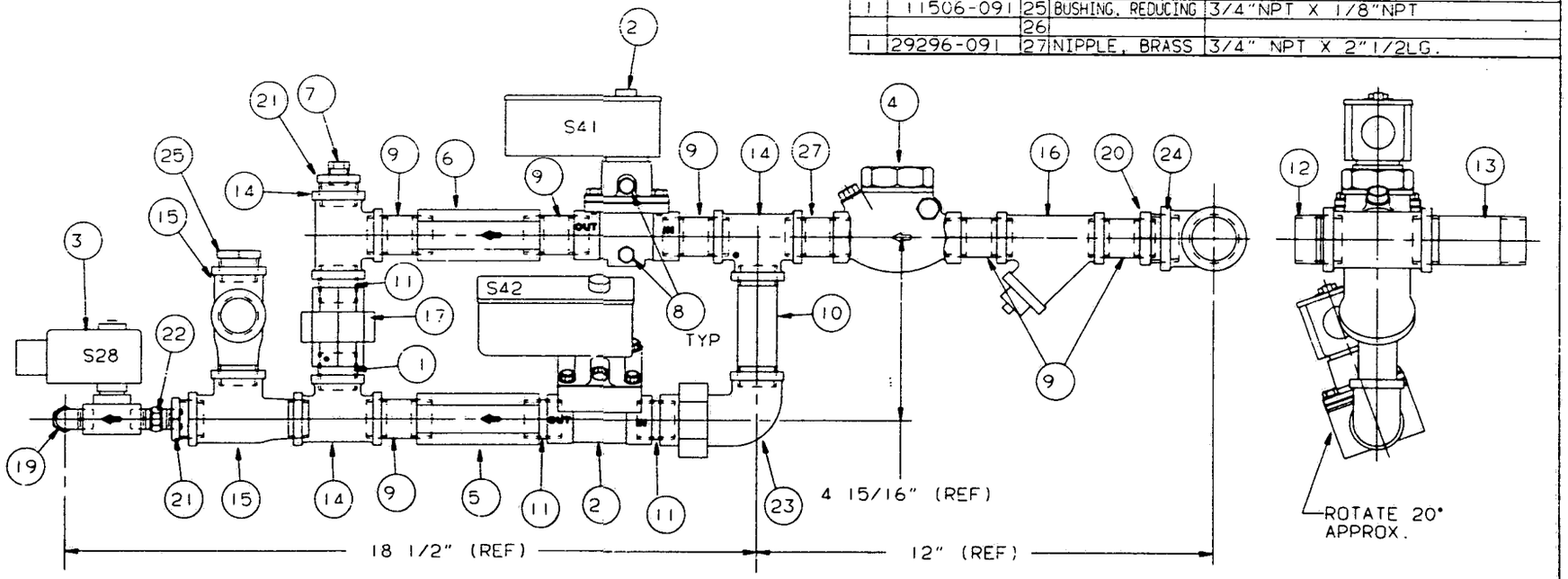

TOLERANCE STANDARD UNLESS OTHERWISE NOTED	FRACTIONAL ±1/64 DECIMAL ±.005 ANGULARITY±1° MACH.SURF 125

NO	DATE	E.C.# NUMBER	NO	DATE	E.C.# NUMBER
3	07-19-90	900129			
2	11-06-89	RA #69			
1	9-06-89	RA #55	4	03-02-92	920049
0	6-7-89	PER#19	3	11-06-90	900200

REVISIONS

© AMSCO 1989

AMERICAN STERILIZER COMPANY
ERIE, PENNSYLVANIA

THIS DRAWING SPECIFICATIONS AND ALL INFORMATION THEREIN ARE THE PROPERTY OF AMERICAN STERILIZER COMPANY AND TO BE MAINTAINED CONFIDENTIAL AND NOT TO BE COPIED OR USED IN ANY WAY DETRIMENTAL TO THE INTEREST OF AMERICAN STERILIZER COMPANY AND SHALL BE RETURNED UPON REQUEST

DWN	CKD	ENG	MFG
NRP	JMT-C	MEC	SON
DATE 5-30-89	DATE 6-7-89	DATE 6-8-89	DATE 6-8-89

TITLE: VALVE ASS'Y 24 X 36 EAGLE 2000 W/DISPOSER

FIRST MADE FOR: 146655-118,120

DWG. NO. 136807-661 | SHEET 1 OF 1

SCALE 1/2 1

CAD DWG.

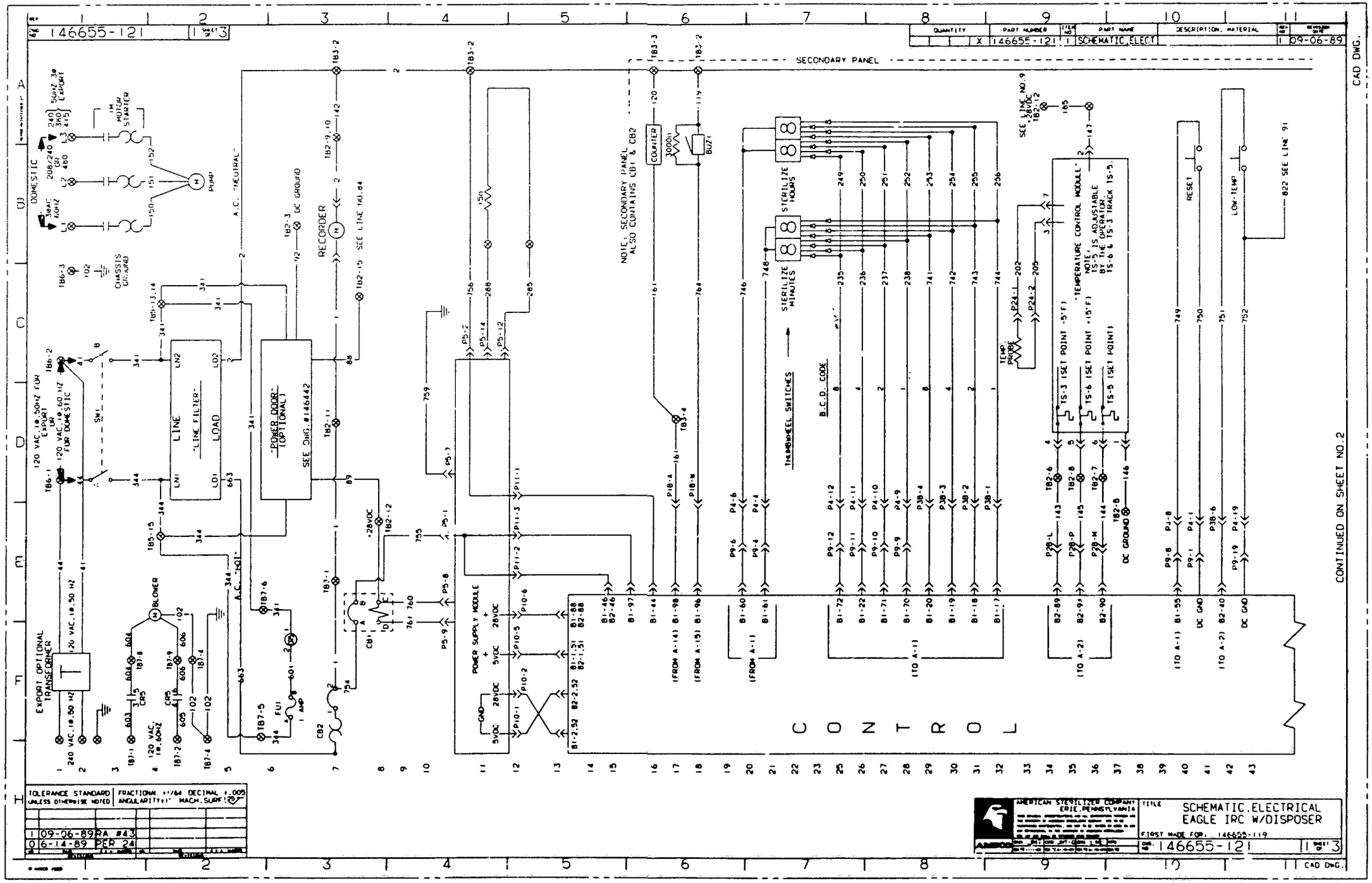
146655-121
SECONDARY PANEL
CONTROL
DOMESTIC
EXPORT
CHASSIS GROUND
A.C. "NEUTRAL"
RECORDER
SEE LINE NO. 84
DC GROUND
"POWER DOOR" (OPTIONAL)
SEE DWG. #146442
"LINE FILTER"
LINE
LOAD
BLOWER
EXPORT OPTIONAL TRANSFORMER
POWER SUPPLY MODULE
NOTE: SECONDARY PANEL ALSO CONTAINS CB1 & CB2
COUNTER
BUZZ
STERILIZE HOURS
STERILIZE MINUTES
THUMBWHEEL SWITCHES
B.C.D. CODE
"TEMPERATURE CONTROL MODULE"
TS-3 (SET POINT -5°F)
TS-6 (SET POINT +15°F)
TS-5 (SET POINT)
TEMP. PROBE
RESET
LOW-TEMP
CONTINUED ON SHEET NO. 2
CAD DWG.
TOLERANCE STANDARD UNLESS OTHERWISE NOTED
FRACTIONAL ±1/64 DECIMAL ±.005
ANGULARITY ±1°
MACH. SURF. 125
09-06-89 RA #43
06-14-89 PER 24
AMERICAN STERILIZER COMPANY ERIE, PENNSYLVANIA
TITLE SCHEMATIC, ELECTRICAL EAGLE IRC W/DISPOSER
FIRST MADE FOR: 146655-119
146655-121
09-06-89

F- 9

F- 10

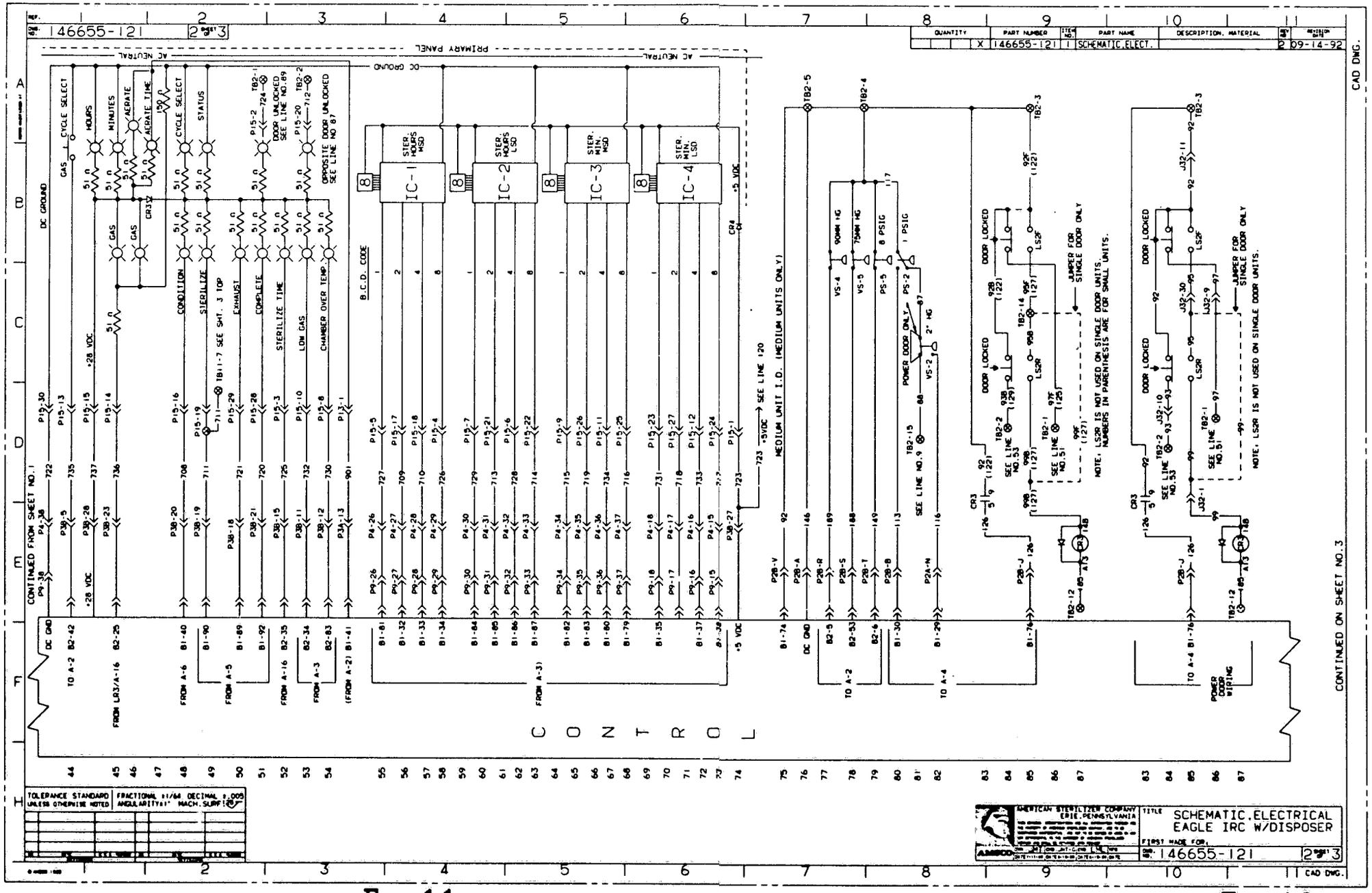
146655-121
2 of 3
QUANTITY
PART NUMBER
PART NAME
DESCRIPTION, MATERIAL
146655-121
SCHEMATIC,ELECT.
09-14-92
CAD DWG.
PRIMARY PANEL
AC NEUTRAL
DC GROUND
CYCLE SELECT
HOURS
MINUTES
AERATE
AERATE TIME
STATUS
CONDITION
STERILIZE
EXHAUST
COMPLETE
STERILIZE TIME
LOW GAS
CHAMBER OVER TEMP.
DOOR UNLOCKED SEE LINE NO.69
OPPOSITE DOOR UNLOCKED SEE LINE NO.87
B.C.D. CODE
STER. HOURS MSD
STER. HOURS LSD
STER. MIN. MSD
STER. MIN. LSD
IC-1
IC-2
IC-3
IC-4
MEDIUM UNIT I.D. (MEDIUM UNITS ONLY)
POWER DOOR ONLY
DOOR LOCKED
JUMPER FOR SINGLE DOOR ONLY
NOTE. LS2R IS NOT USED ON SINGLE DOOR UNITS. NUMBERS IN PARENTHESIS ARE FOR SMALL UNITS.
NOTE. LS2R IS NOT USED ON SINGLE DOOR UNITS.
CONTROL
CONTINUED FROM SHEET NO.1
CONTINUED ON SHEET NO.3
TOLERANCE STANDARD UNLESS OTHERWISE NOTED
FRACTIONAL ±1/64 DECIMAL ±.005
ANGULARITY ±1°
MACH. SURF.
AMERICAN STERILIZER COMPANY ERIE, PENNSYLVANIA
TITLE
SCHEMATIC,ELECTRICAL
EAGLE IRC W/DISPOSER
FIRST MADE FOR:
146655-121
2 of 3
CAD DWG.

F- 11

F- 12

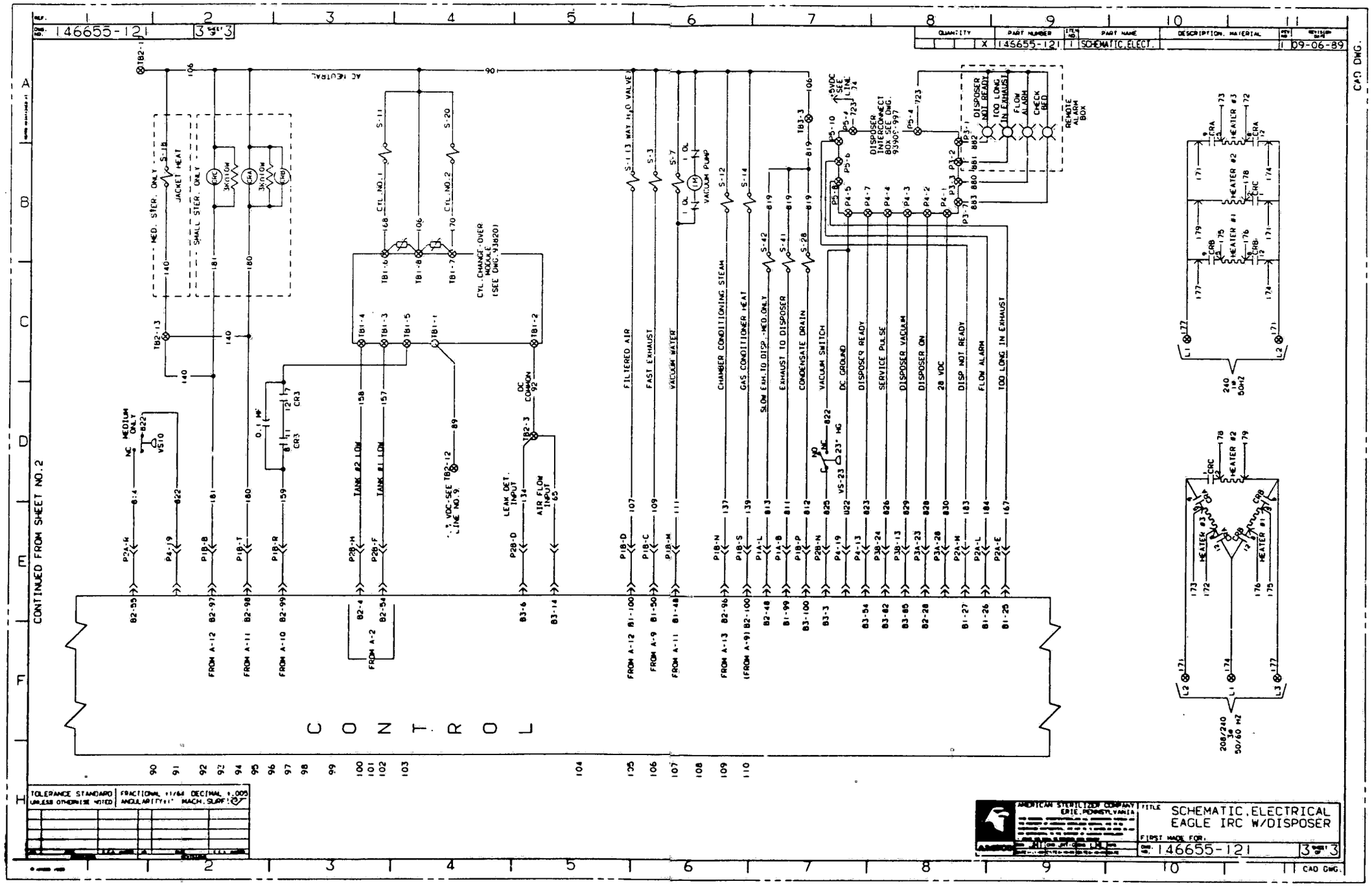
146655-121
3 of 3
QUANTITY
PART NUMBER
PART NAME
DESCRIPTION, MATERIAL
X
146655-121
SCHEMATIC,ELECT.
09-06-89
CAD DWG.
AC NEUTRAL
MED. STER. ONLY
SMALL STER. ONLY
JACKET HEAT
CYL. CHANGE-OVER MODULE (SEE DWG.93620)
CYL. NO.1
CYL. NO.2
FILTERED AIR
FAST EXHAUST
VACUUM WATER
CHAMBER CONDITIONING STEAM
GAS CONDITIONER HEAT
SLOW EXH. TO DISP.-MED. ONLY
EXHAUST TO DISPOSER
CONDENSATE DRAIN
VACUUM SWITCH
DC GROUND
DISPOSER READY
SERVICE PULSE
DISPOSER VACUUM
DISPOSER ON
28 VDC
DISP NOT READY
FLOW ALARM
TOO LONG IN EXHAUST
DISPOSER INTERCONNECT BOX SEE DWG. 93905-997
REMOTE ALARM BOX
DISPOSER NOT READY
TOO LONG IN EXHAUST
FLOW ALARM
CHECK BED
TANK #2 LOW
TANK #1 LOW
LEAK DET. INPUT
AIR FLOW INPUT
DC COMMON
VACUUM PUMP
NC MEDIUM ONLY
CONTINUED FROM SHEET NO.2
C O N T R O L
240 1Ø 50HZ
208/240 3Ø 50/60 HZ
HEATER #1
HEATER #2
HEATER #3
TOLERANCE STANDARD UNLESS OTHERWISE NOTED
FRACTIONAL ±1/64 DECIMAL ±.005
ANGULARITY±1° MACH. SURF.
AMERICAN STERILIZER COMPANY ERIE, PENNSYLVANIA
TITLE
SCHEMATIC, ELECTRICAL
EAGLE IRC W/DISPOSER
FIRST MADE FOR:
146655-121
3 of 3
CAD DWG.

F- 13

F- 14

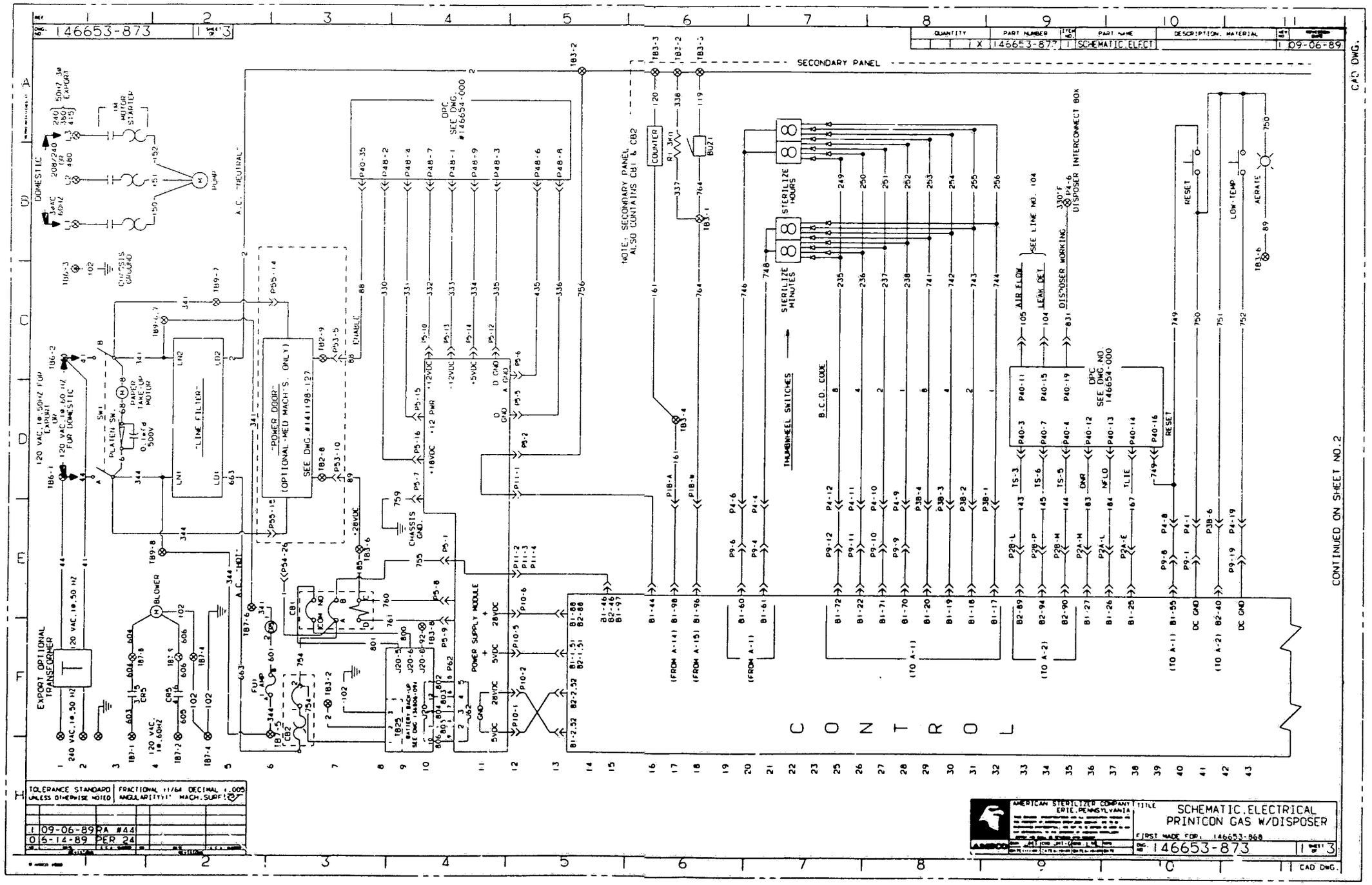
146653-873
SECONDARY PANEL
CONTROL
CONTINUED ON SHEET NO. 2
EXPORT OPTIONAL TRANSFORMER
DOMESTIC
PUMP
BLOWER
"LINE FILTER"
"POWER DOOR" (OPTIONAL-MED MACH'S. ONLY)
SEE DWG. #141198-127
POWER SUPPLY MODULE
BATTERY BACK-UP
COUNTER
BUZZ1
THUMBWHEEL SWITCHES
B.C.D. CODE
STERILIZE HOURS
STERILIZE MINUTES
AIR FLOW
LEAK DET.
DISPOSER WORKING
DISPOSER INTERCONNECT BOX
RESET
LOW TEMP
AERATE
NOTE: SECONDARY PANEL ALSO CONTAINS CB1 & CB2
SCHEMATIC, ELECTRICAL
PRINTCON GAS W/DISPOSER
AMERICAN STERILIZER COMPANY
ERIE, PENNSYLVANIA
TOLERANCE STANDARD UNLESS OTHERWISE NOTED
09-06-89 RA #44
06-14-89 PER 24

G- 1

G- 2

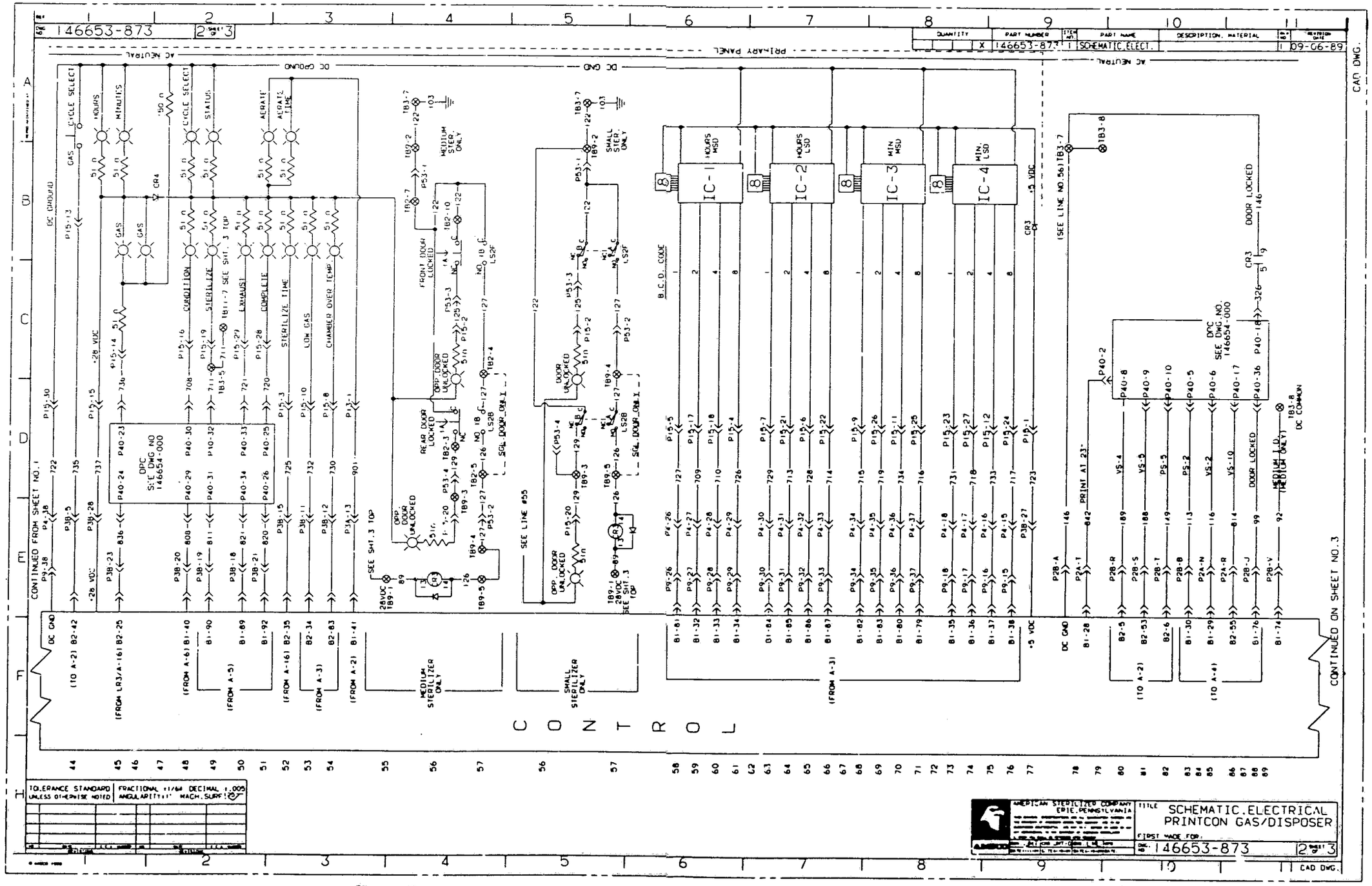
146653-873
2 of 3
QUANTITY
PART NUMBER
PART NAME
DESCRIPTION, MATERIAL
146653-873
SCHEMATIC,ELECT.
09-06-89
PRIMARY PANEL
AC NEUTRAL
DC GND
DC GROUND
CONTINUED FROM SHEET NO.1
CONTINUED ON SHEET NO.3
CONTROL
CYCLE SELECT
HOURS
MINUTES
STATUS
AERATE
AERATE TIME
CONDITION
STERILIZE
EXHAUST
COMPLETE
STERILIZE TIME
LOW GAS
CHAMBER OVER TEMP
OPC
SEE DWG NO
146654-000
FRONT DOOR LOCKED
REAR DOOR LOCKED
OPP. DOOR UNLOCKED
DOOR UNLOCKED
MEDIUM STER. ONLY
SMALL STER. ONLY
SEE LINE #55
SEE SHT.3 TOP
B.C.D. CODE
IC-1 HOURS MSD
IC-2 HOURS LSD
IC-3 MIN MSD
IC-4 MIN. LSD
+5 VDC
SEE LINE NO.56
DOOR LOCKED
PRINT AT 23"
MEDIUM STERILIZER ONLY
SMALL STERILIZER ONLY
TOLERANCE STANDARD UNLESS OTHERWISE NOTED
FRACTIONAL ±1/64 DECIMAL ±.005
ANGULARITY±1° MACH. SURF.
AMERICAN STERILIZER COMPANY
ERIE, PENNSYLVANIA
TITLE
SCHEMATIC,ELECTRICAL
PRINTCON GAS/DISPOSER
FIRST MADE FOR:
146653-873
2 of 3
CAD DWG.

G- 3

G- 4

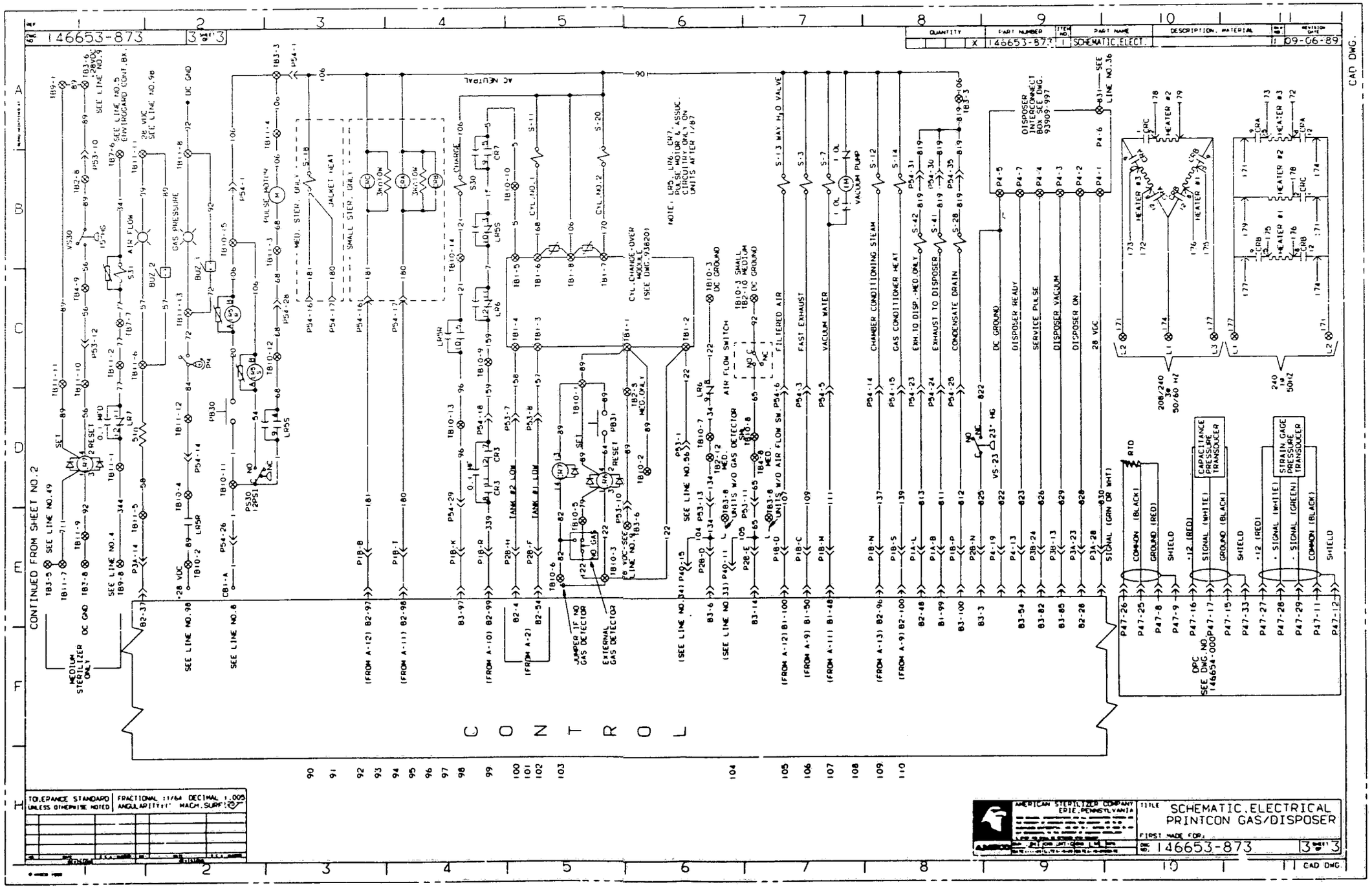
146653-873
3 of 3
QUANTITY
PART NUMBER
ITEM NO.
PART NAME
DESCRIPTION, MATERIAL
REVISION DATE
X
146653-873
1
SCHEMATIC,ELECT.
09-06-89
CAD DWG.
CONTINUED FROM SHEET NO.2
CONTROL
AC NEUTRAL
DC GND
28 VDC
SEE LINE NO.49
SEE LINE NO.4
SEE LINE NO.98
SEE LINE NO.8
SEE LINE NO.36
SEE LINE NO.56
SEE LINE NO.34
SEE LINE NO.33
SEE LINE NO.105
SEE LINE NO.107
SEE LINE NO.109
MEDIUM STERILIZER ONLY
AIR FLOW
GAS PRESSURE
PULSE MOTOR
CHARGE
JACKET HEAT
MED. STER. ONLY
SMALL STER. ONLY
CYL. CHANGE-OVER MODULE (SEE DWG.93620)
NOTE: LR5, LR6 (CR7) CONSTITUTE A LASSUC. CIRCUIT FOR ONLY ON UNITS AFTER 1/87
JUMPER IF NO GAS DETECTOR
EXTERNAL GAS DETECTOR
AIR FLOW SWITCH
UNITS W/O GAS DETECTOR
UNITS W/O AIR FLOW SW.
FILTERED AIR
FAST EXHAUST
VACUUM WATER
VACUUM PUMP
CHAMBER CONDITIONING STEAM
GAS CONDITIONER HEAT
EXH.TO DISP.-MED.ONLY
EXHAUST TO DISPOSER
CONDENSATE DRAIN
DISPOSER READY
SERVICE PULSE
DISPOSER VACUUM
DISPOSER ON
DISPOSER INTERCONNECT BOX S.S. DWG. 93905-997
HEATER #1
HEATER #2
HEATER #3
208/240 1Ø 50/60 HZ
240 1Ø 50/60
RTD
CAPACITANCE PRESSURE TRANSDUCER
STRAIN GAGE PRESSURE TRANSDUCER
COMMON (BLACK)
GROUND (RED)
SHIELD
SIGNAL (WHITE)
SIGNAL (GREEN)
SIGNAL (GRN OR WHT)
DPC SEE DWG.NO. 146654-000
TOLERANCE STANDARD UNLESS OTHERWISE NOTED
FRACTIONAL ±1/64 DECIMAL ±.005
ANGULARITY±1° MACH.SURF.
AMERICAN STERILIZER COMPANY ERIE, PENNSYLVANIA
TITLE
SCHEMATIC,ELECTRICAL PRINTCON GAS/DISPOSER
FIRST MADE FOR:
146653-873
3 of 3
CAD DWG.

QUANTITY	PART NUMBER	ITEM NO	PART NAME	DESCRIPTION, MATERIAL	REV	REVISION DATE
X	146657-256	1	SCHEMATIC	IRC INTERFACE	0	03-18-92

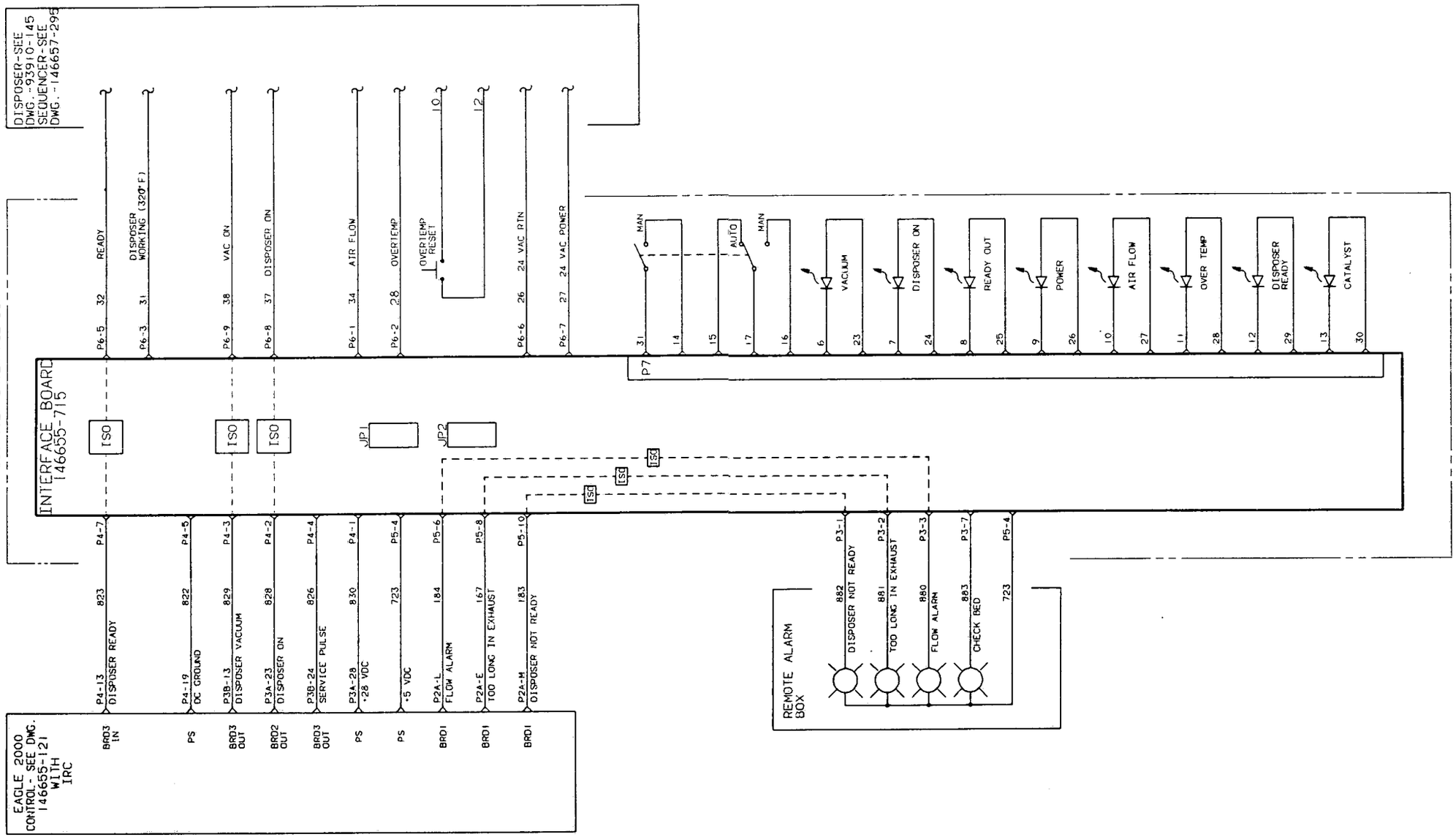

TOLERANCE STANDARD UNLESS OTHERWISE NOTED | FRACTIONAL ±1/64 DECIMAL ±.005 ANGULARITY ±1° MACH SURF 125

0 03-18-92 920052

AMERICAN STERILIZER COMPANY ERIE, PENNSYLVANIA

TITLE IRC-DISPOSER SEQUENCER INTERFACE

FIRST MADE FOR

DWG NO 146657-256 SHEET 1 OF 1

CAD DWG.

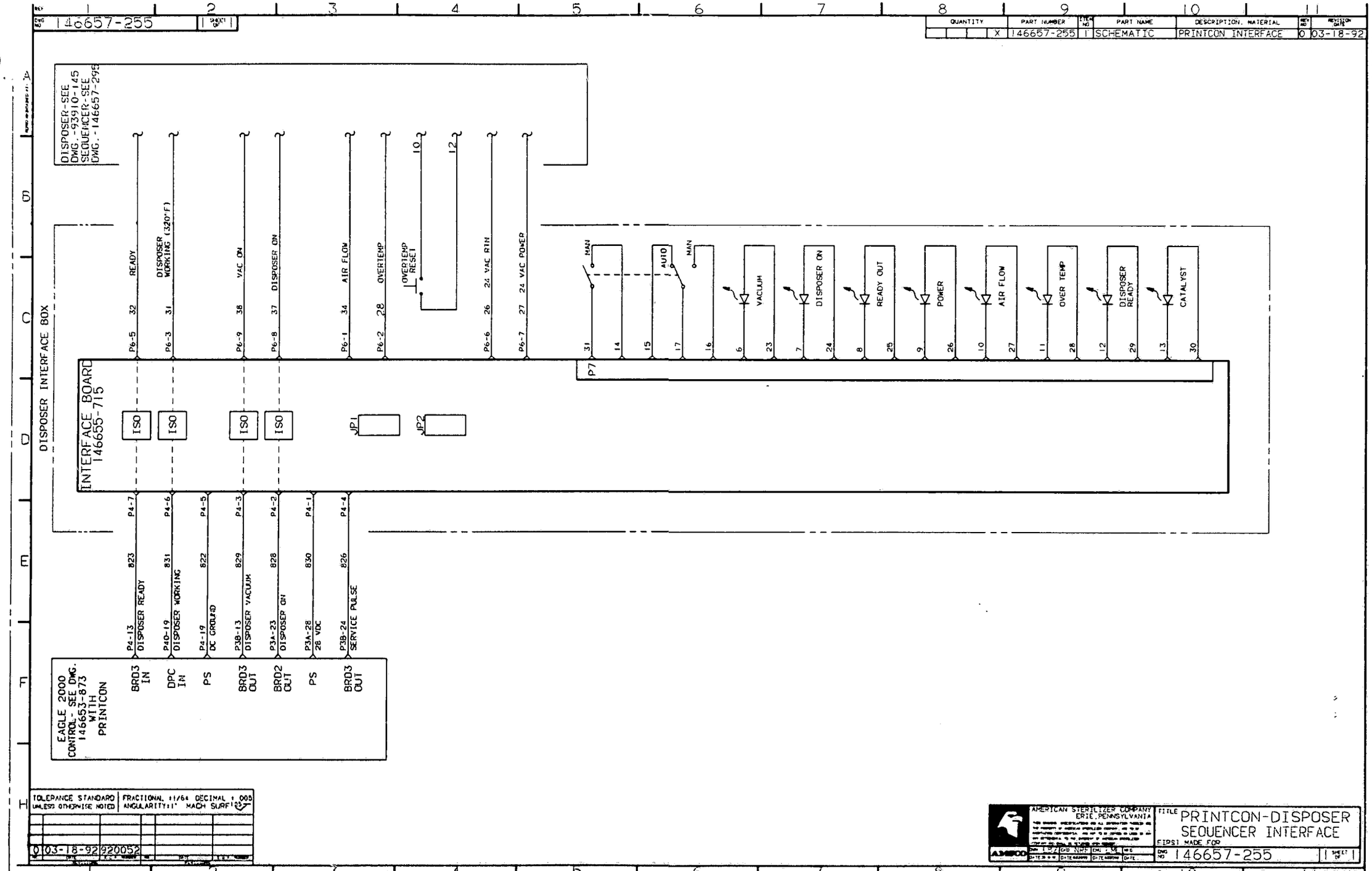
DWG NO 146657-255
SHEET 1 OF 1
QUANTITY | PART NUMBER | ITEM NO | PART NAME | DESCRIPTION, MATERIAL | REV NO | REVISION DATE
X | 146657-255 | 1 | SCHEMATIC | PRINTCON INTERFACE | 0 | 03-18-92
CAD DWG.
DISPOSER-SEE DWG.-93910-145
SEQUENCER-SEE DWG.-146657-295
DISPOSER INTERFACE BOX
INTERFACE BOARD 146655-715
ISO
JP1
JP2
P6-5 32 READY
P6-3 31 DISPOSER WORKING (320°F)
P6-9 38 VAC ON
P6-8 37 DISPOSER ON
P6-1 34 AIR FLOW
P6-2 28 OVERTEMP
OVERTEMP RESET
10
12
P6-6 26 24 VAC RTN
P6-7 27 24 VAC POWER
MAN
AUTO
MAN
31 14 15 17 16
P7
6 VACUUM 23
7 DISPOSER ON 24
8 READY OUT 25
9 POWER 26
10 AIR FLOW 27
11 OVER TEMP 28
12 DISPOSER READY 29
13 CATALYST 30
P4-7 823 P4-13 DISPOSER READY
P4-6 831 P40-19 DISPOSER WORKING
P4-5 822 P4-19 DC GROUND
P4-3 829 P38-13 DISPOSER VACUUM
P4-2 828 P3A-23 DISPOSER ON
P4-1 830 P3A-28 28 VDC
P4-4 826 P38-24 SERVICE PULSE
EAGLE 2000 CONTROL - SEE DWG. 146653-873 WITH PRINTCON
BRD3 IN
DPC IN
PS
BRD3 OUT
BRD2 OUT
PS
BRD3 OUT
TOLERANCE STANDARD UNLESS OTHERWISE NOTED
FRACTIONAL ±1/64 DECIMAL ±.005 ANGULARITY±1° MACH SURF 125
0 03-18-92 920052
AMERICAN STERILIZER COMPANY ERIE, PENNSYLVANIA
AMSCO
TITLE PRINTCON-DISPOSER SEQUENCER INTERFACE
FIRST MADE FOR
DWG NO 146657-255
SHEET 1 OF 1
CAD DWG

DWG. NO. 136806-997 | SHEET OF 1

QUANTITY				PART NUMBER	ITEM NO.	PART NAME	DESCRIPTION, MATERIAL	REV NO	REVISION DATE
			X	136806-997	1	INTERFACE BOX		4	07-17-90
			1	136806-996	2	BOX MODIFICATION			
			1	146655-715	3	PC BOARD ASSY.			
			1	93910-078	4	BRACKET, MTG.			
			8	129361-013	5	LED, SNAP-IN			
			1	93909-993	6	SWITCH, ROCKER			
			4	129361-680	7	STANDOFF,	M/F-#6-32 X 7/16" LG		
			4	93908-039	8	SCREW, SEMS	#6-32 X 3/8" LG		
			4	50527-061	9	SCREW, SOC.HD.	#8-32 X 1/2" LG		
			2	17796-091	10	WASHER, FLAT	.203 ID X .438 OD X .031 THK		
			4	129359-531	11	NUT, KEPS	#8-32		
			1	56396-486	12	HOUSING, PLUG	34 POS DOUBLE ROW		
			21	150822-810	13	CONTACT, SOCKET			
			5	150476-410	14	REC., FAST ON	.032 X .250 TAB 22/18 AWG		
					15	WIRE, BLACK	6'4" LG. SEE NOTES #1, 2 & 3		
			1	129326-001	16	HARNESS MOUNT			
			1	84104-001	17	TIE WRAP			
			1	93910-111	18	LABEL			
			1	129361-020	19	PLUG, 7 POS.	P4		
			1	129361-113	20	SWITCH, RESET			
			1	93910-137	21	BRACKET, SW.			
			2	129266-001	22	TUBING, HYSHRINK			
			1	129361-021	23	PLUG, 9 POS.	P6		
			4	84121-002	24	NUT, KEPS	#6-32		

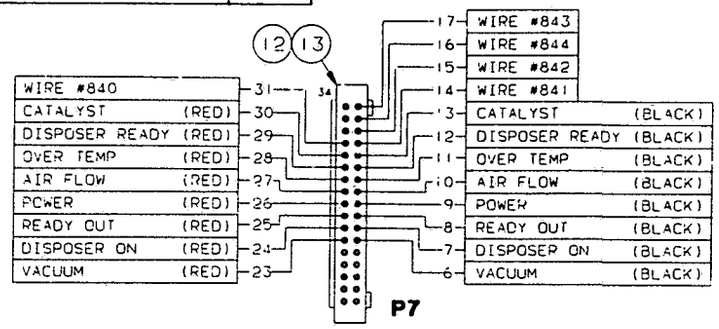

VIEW B-B
SCALE 1.5:1

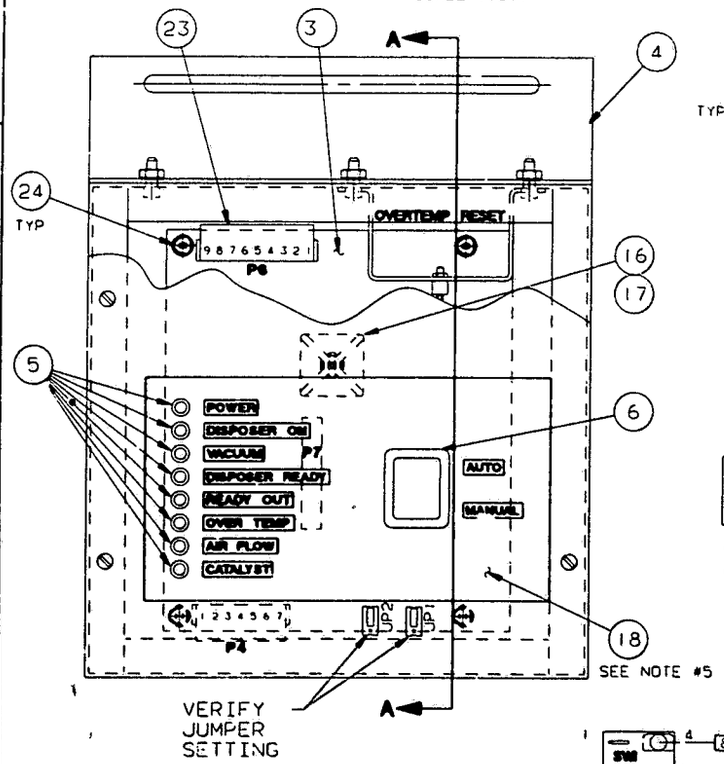

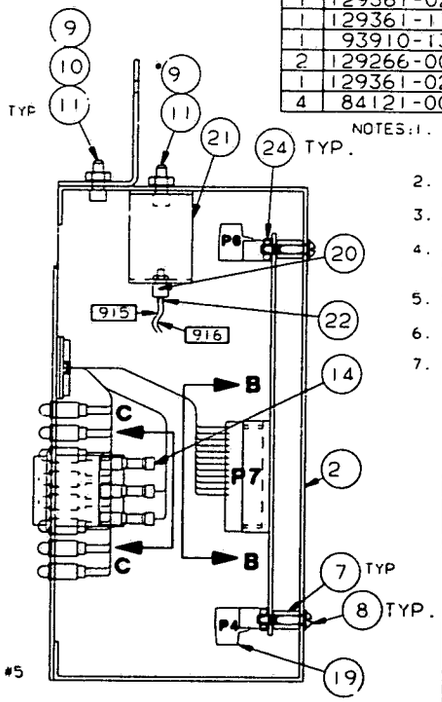

SECTION A-A

NOTES:
1. WIRE #22 GA STRANDED COPPER, 19/34 STRANDING, TEFLON INSULATION, U.L.(STYLE 1213, 300 V, 105°C)AND CSA (APPLIANCE WIRE..010 THK INSULATION, 150V,150°C) LABELS REQ.D.
2. SWITCH WIRES TO BE MARKED ONCE IN CENTER, USING BRADY TYPE MARKERS BLACK LETTERS ON WHITE BACKGROUND.
3. BLACK WIRE, ITEM #15, CUT INTO 5 PIECES 12"±1/8 LG. & 2 PIECES 8"±1/8 LG.
4. CONNECTION METHOD "A", ITEM #13, STRIP 3/16"
   CONNECTION METHOD "B", ITEM #14, STRIP 1/4"
   CONNECTION METHOD "C", SOLDER - STRIP 1/4" AND TIN.
5. CAREFULLY APPLY COVER LABEL, ITEM #18, BEFORE WIRING SWITCH, ITEM 6, AND LED LIGHTS, ITEM #5.
6. ALL SOLDER MATERIAL SHALL BE IN ACCORDANCE WITH AMSCO DWG. 52595.
7. LABEL COMPONENTS AS SHOWN WITH BRADY TYPE MARKERS. BLACK LETTERS ON YELLOW BACKGROUND.

WIRE #	FROM	CONN METH	TO	CONN METH
840	SW POS-2	B	P7-31	A
841	SW POS-3	B	P7-14	A
842	SW POS-4	B	P7-15	A
843	SW POS-5	B	P7-17	A
844	SW POS-6	B	P7-16	A
915	RESET SWITCH	C	---	--
916	RESET SWITCH	C	---	---
BLK LEAD	AIR FLOW LED	---	P7-10	A
RED LEAD	AIR FLOW LED	---	P7-27	A
BLK LEAD	CATALYST LED	---	P7-13	A
RED LEAD	CATALYST LED	---	P7-30	A
BLK LEAD	DISP. ON LED	---	P7-7	A
RED LEAD	DISP. ON LED	---	P7-24	A
BLK LEAD	DISP. READY LED	---	P7-12	A
RED LEAD	DISP. READY LED	---	P7-29	A
BLK LEAD	OVER TEMP LED	---	P7-11	A
RED LEAD	OVER TEMP LED	---	P7-28	A
BLK LEAD	POWER LED	---	P7-9	A
RED LEAD	POWER LED	---	P7-26	A
BLK LEAD	READY OUT LED	---	P7-8	A
RED LEAD	READY OUT LED	---	P7-25	A
BLK LEAD	VACUUM LED	---	P7-6	A
RED LEAD	VACUUM LED	---	P7-23	A

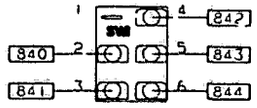

VIEW C-C
SCALE 1:1

TOLERANCE STANDARD UNLESS OTHERWISE NOTED | FRACTIONAL ±1/64 DECIMAL ±.005 ANGULARITY±1° MACH.SURF 125

NO	DATE	E.C.N. NUMBER	NO	DATE	E.C.N. NUMBER
3	04-09-90	RA#112			
2	1-29-90	RA#100			
1	5-08-89	RA#13	4	07-17-90	900200
0	4-28-89	PER #2	4	07-17-90	RA#155

REVISIONS

AMERICAN STERILIZER COMPANY
ERIE, PENNSYLVANIA

AMSCO

DWN JMT DATE 2-13-89 | CKD JMT DATE 4-28-89 | ENG. ML DATE 5-2-89 | MFG SDN DATE 5-3-89

TITLE
INTERFACE BOX ASS'Y.
PRNT & RND CHRT W/DISPOSER

FIRST MADE FOR: 146653-868

DWG NO. 136806-997 | SHEET OF 1

SCALE 3/4 1

CAD DWG.

© AMSCO 1989

DWG NO	SHEET OF
146655-712	1

QUANTITY	PART NUMBER	ITEM NO	PART NAME	DESCRIPTION, MATERIAL	REV NO	REVISION DATE
X	146655-712	1	PPG SCHEMATIC	20 X 20 GAS	3	03-13-92

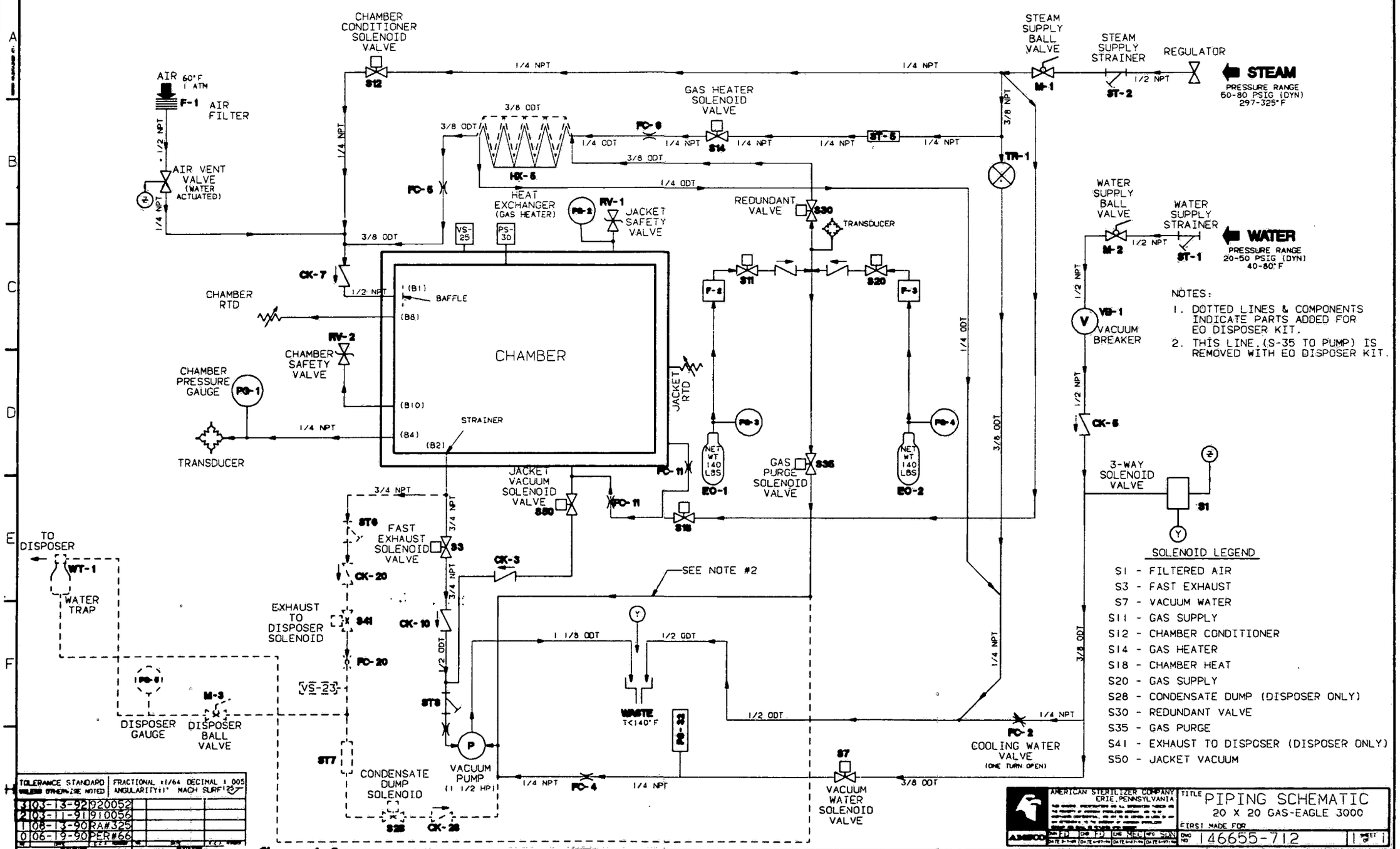

TOLERANCE STANDARD UNLESS OTHERWISE NOTED	FRACTIONAL ±1/64 DECIMAL ±.005 ANGULARITY±1° MACH SURF 125

REV	DATE	DWN	CHK	APVD	DESCRIPTION
3	03-13-92	020052			
2	03-11-91	910056			
1	08-13-90	RA#325			
0	06-9-90	PER#66			

AMERICAN STERILIZER COMPANY ERIE, PENNSYLVANIA

TITLE PIPING SCHEMATIC 20 X 20 GAS-EAGLE 3000

FIRST MADE FOR

DWG NO 146655-712 SHEET 1 OF 1

CAD DWG

AMSCO

EO DISPOSER SYSTEM

INTERFACE: EAGLE 3000 & 2000, MEDALLION, AERATION CABINET

P-764323-254

9/92

2 of 3

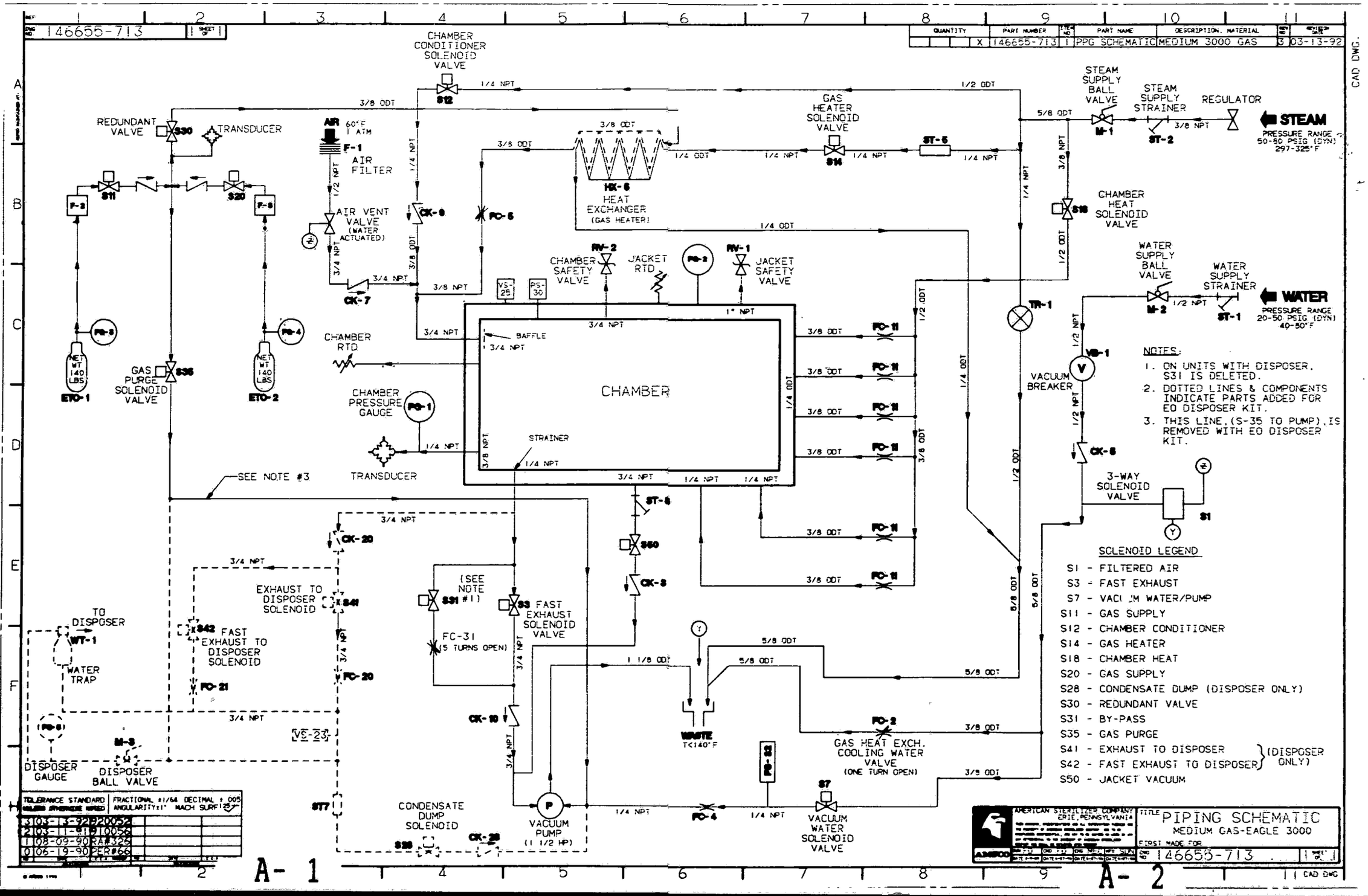
146655-713
CHAMBER CONDITIONER SOLENOID VALVE
S12
REDUNDANT VALVE
S30
TRANSDUCER
AIR 60°F 1 ATM
F-1
AIR FILTER
AIR VENT VALVE (WATER ACTUATED)
CK-7
CK-9
FC-5
HX-6
HEAT EXCHANGER (GAS HEATER)
GAS HEATER SOLENOID VALVE
S14
ST-5
STEAM SUPPLY BALL VALVE
M-1
STEAM SUPPLY STRAINER
ST-2
REGULATOR
STEAM
PRESSURE RANGE 50-80 PSIG (DYN) 297-325°F
CHAMBER HEAT SOLENOID VALVE
S18
WATER SUPPLY BALL VALVE
M-2
WATER SUPPLY STRAINER
ST-1
WATER
PRESSURE RANGE 20-50 PSIG (DYN) 40-80°F
S11
S20
F-2
F-3
PG-3
PG-4
ETO-1
ETO-2
NET WT 140 LBS
GAS PURGE SOLENOID VALVE
S35
CHAMBER RTD
CHAMBER PRESSURE GAUGE
PG-1
TRANSDUCER
SEE NOTE #3
RV-2
CHAMBER SAFETY VALVE
JACKET RTD
PG-2
RV-1
JACKET SAFETY VALVE
VS-25
PS-30
BAFFLE
CHAMBER
STRAINER
FC-11
TR-1
VB-1
VACUUM BREAKER
CK-6
3-WAY SOLENOID VALVE
S1
NOTES:
1. ON UNITS WITH DISPOSER, S31 IS DELETED.
2. DOTTED LINES & COMPONENTS INDICATE PARTS ADDED FOR EO DISPOSER KIT.
3. THIS LINE, (S-35 TO PUMP), IS REMOVED WITH EO DISPOSER KIT.
SOLENOID LEGEND
S1 - FILTERED AIR
S3 - FAST EXHAUST
S7 - VACUUM WATER/PUMP
S11 - GAS SUPPLY
S12 - CHAMBER CONDITIONER
S14 - GAS HEATER
S18 - CHAMBER HEAT
S20 - GAS SUPPLY
S28 - CONDENSATE DUMP (DISPOSER ONLY)
S30 - REDUNDANT VALVE
S31 - BY-PASS
S35 - GAS PURGE
S41 - EXHAUST TO DISPOSER
S42 - FAST EXHAUST TO DISPOSER
(DISPOSER ONLY)
S50 - JACKET VACUUM
ST-4
S50
CK-8
CK-20
S41
S42
FC-20
FC-21
TO DISPOSER
WT-1
WATER TRAP
PG-6
M-3
DISPOSER GAUGE
DISPOSER BALL VALVE
VS-23
(SEE NOTE #1)
S31
S3
FAST EXHAUST SOLENOID VALVE
FC-31 (5 TURNS OPEN)
CK-10
WASTE T<140°F
FC-2
GAS HEAT EXCH. COOLING WATER VALVE (ONE TURN OPEN)
S7
VACUUM WATER SOLENOID VALVE
FC-4
VACUUM PUMP (1 1/2 HP)
CONDENSATE DUMP SOLENOID
S28
CK-28
ST7
TOLERANCE STANDARD
FRACTIONAL ±1/64 DECIMAL ± .005
ANGULARITY±1° MACH SURF 125
3 03-13-92 ECO#20052
2 03-11-91 ECO#10056
1 08-09-90 RA#326
0 06-19-90 PER#66
AMERICAN STERILIZER COMPANY ERIE, PENNSYLVANIA
TITLE PIPING SCHEMATIC
MEDIUM GAS-EAGLE 3000
FIRST MADE FOR
146655-713
CAD DWG
A-1
A-2

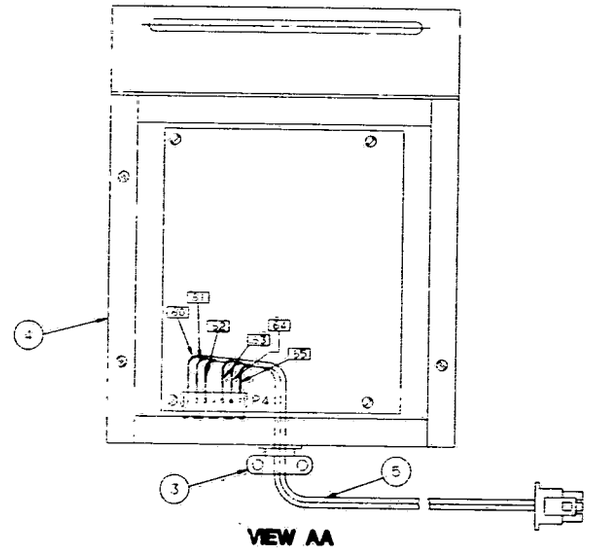

VIEW AA
INTERFACE BOX

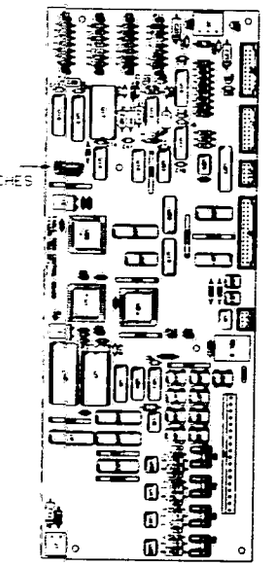

VIEW BB

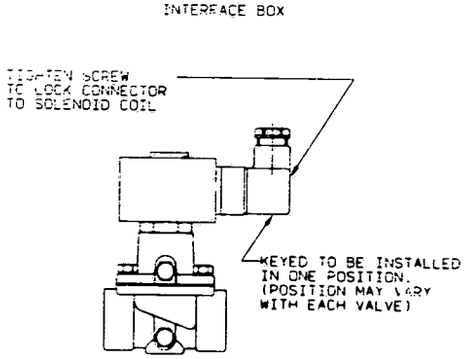

VIEW CC
TYP. SOLENOID HOOK-UP

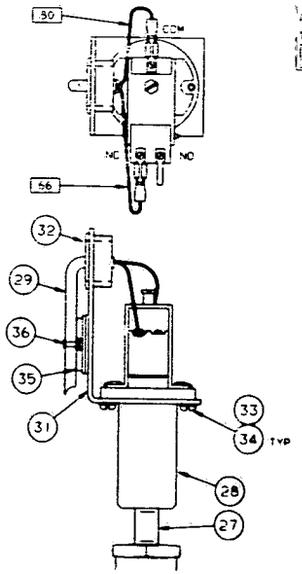

VIEW DD
VACUUM SWITCH

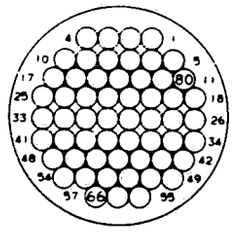

VIEW EE
P53
SHOWN ENLARGED FOR CLARITY

QUANTITY	PART NUMBER	ITEM NO.	PART NAME	DESCRIPTION, MATERIAL	REV	REVISION DATE
1	146655-710	1	DISPOSER KIT	20" EAGLE 3000	1	4103-17-92
1	136807-904	2	VALVE ASS'Y	541		
1	91354-045	3	CLAMP, CABLE			
1	136807-903	4	BOX, INTERFACE			
1	136807-906	5	HARNESS, ASSY			
1	129362-138	6	INSTALL. INST.	REF. DWG.		
1	129362-139	7	EQUIP. MANUAL	REF. DWG.		
1	93910-145	8	WIRING CONNECTIONS	DISPOSER - REF. DWG.		
1		9		REF. S P/N 146655-710		
1	39590-010	10	CLAMP, PIPE	3/4" NPT		
1	150822-295	11	NIPPLE, STEEL	1/4" NPT X 3 1/4" LG. (SOLID)		
1	93909-979	12	BRKT. PIPE SPT.			
2	150828-689	13	NUT, LOCK	1/4-18 NPSL		
2	52148-045	14	LOCKWASHER	9/16" ID		
4	129361-716	15	SCREW, FLG LOCK	1/4-20 X 1"LG.		
4	129360-015	16	NUT, FLG LOCK	1/4-20		
1		17	TUBING, COPPER	3/8"ODT X 22" LG. SEE NOTE #2		
1		18	TUBING, COPPER	3/8"ODT X 36" LG. SEE NOTE #2		
1	150828-262	19	VALVE, CHECK			
1	45589-091	20	COUPLING	1/4 NPT		
1	939-091	21	BUSHING, RED.	1/4 NPT X 1/8 NPT		
1	76053-091	22	BUSHING, RED.	1/2 NPT X 1/4 NPT		
1	90525-091	23	GAUGE	1/8 NPT		
1	129356-508	24	TEE, SOLDER	3/4 X 3/4 X 1/2 NPT		
1	93910-642	25	VALVE, BALL	3/4 SOLDER		
1	764317-524	26	TAPE, TEFLON			
1	28899-091	27	NIPPLE, BRASS	1/8 NPT X 1"		
1	83366-001	28	VACUUM SWITCH			
1	93910-654	29	CABLE, EXT.			
1	93910-653	30	TRAP, WATER			
1	93909-980	31	BRACKET	VACUUM SWITCH		
1	76262-091	32	BUSHING, SNAP			
2	3984-041	33	SCREW	#6-32 X 3/8" LG.		
2	19675-041	34	LOCKWASHER			
4	129326-001	35	MOUNT, HARNESS			
6	84104-001	36	TIE, WIRE			
1	34218-091	37	FITTING, STR.	1/4 ODT X 1/4 NPT		
1	45407-091	38	ELL, COMP.	1/4 ODT X 1/4 NPT		
1		39	TUBING, COPPER	1/4 O.D. X 10'- 0" LG. SEE NOTE #4		
1	146657-275	40	SCHEMATIC			
1	129362-980	41	GUIDELINES			
1	150822-048	42	VALVE, BALL			
1	28917-091	43	NIPPLE, BRASS			

NOTES:

1. USE PIPE SEALANT PER AMSCO DWG. 150822-020 ON ALL THREADED JOINTS.
2. COPPER TUBING .030 WALL X 3/8"ODT, SOFT ANNEALED, ASTM B280.
3. INCLUDE WITH EACH KIT ONE PRINT, P/N 146655-710.
4. COPPER TUBING .030 WALL X 1/4" O.D. SOFT ANNEALED, ASTM B280
5. LABEL VACUUM SWITCH 'VS23', ITEM #28, WITH BRADY TYPE MARKERS, BLACK LETTERS ON YELLOW BACKGROUND.
6. SEE SHEET #3 FOR WATER TRAP INSTALLATION INSTRUCTIONS.

TOLERANCE STANDARD UNLESS OTHERWISE NOTED: FRACTIONAL ±1/64 DECIMAL ±.005 ANGULARITY ±1° MACH. SURF. 125

2	110-08-90	9109043		
2	110-08-90	9A#360		
	07-31-92	2A#318	4	103-17-92 920052
0	106-14-90	PER#63	3	111-11-91 910211

AMERICAN STERILIZER COMPANY ERIE, PENNSYLVANIA

TITLE: ETO DISPOSER KIT ASS'Y 20" EAGLE 3000 GAS

FIRST MADE FOR:

DWG. NO. 146655-710 REV 1

CAD DWG.

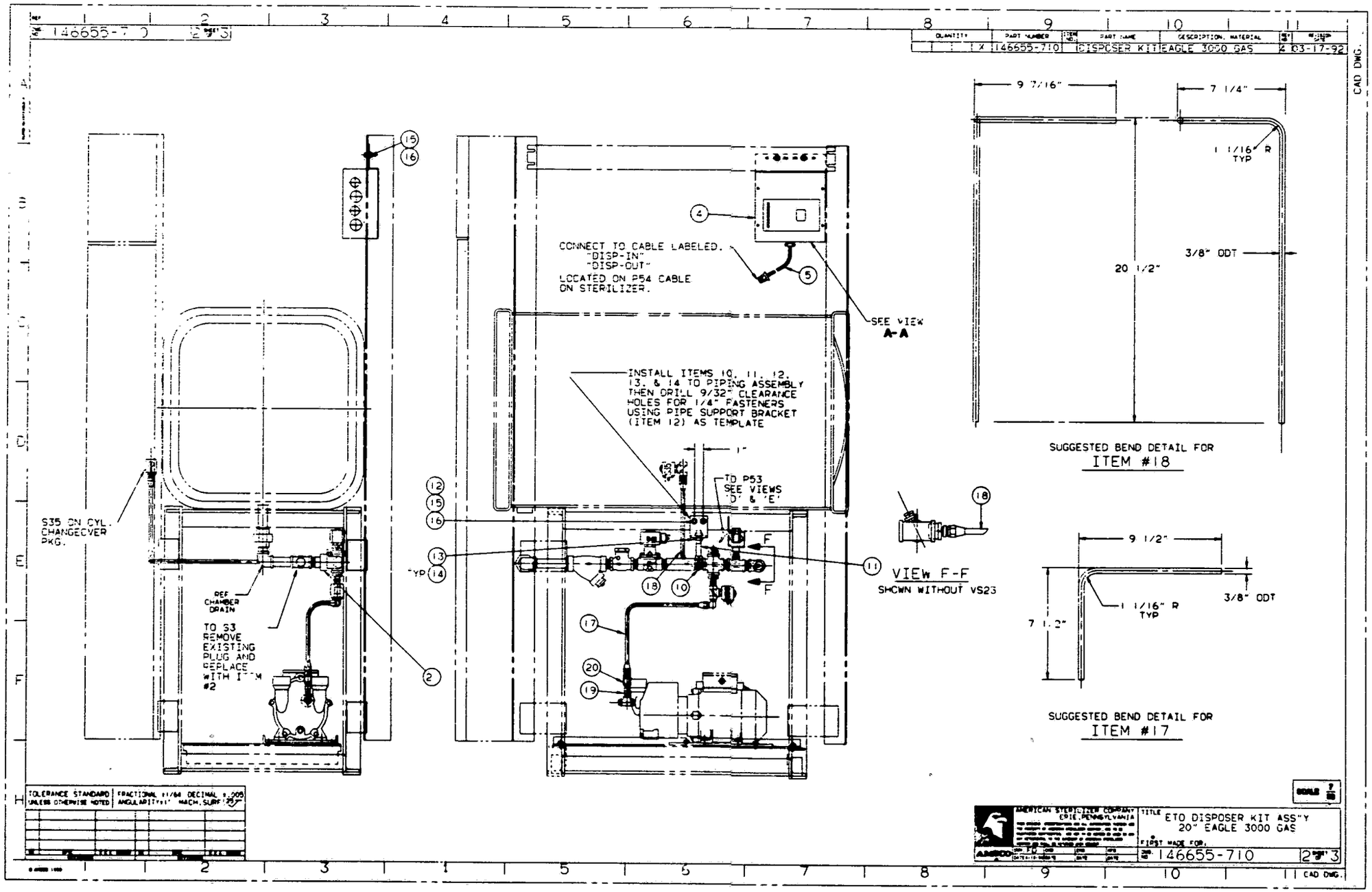
146655-710
QUANTITY | PART NUMBER | ITEM NO. | PART NAME | DESCRIPTION, MATERIAL | REVISION
1 | 146655-710 | | DISPOSER KIT | EAGLE 3000 GAS | 03-17-92
CAD DWG.
CONNECT TO CABLE LABELED.
"DISP-IN"
"DISP-OUT"
LOCATED ON P54 CABLE ON STERILIZER.
SEE VIEW A-A
INSTALL ITEMS 10, 11, 12, 13, & 14 TO PIPING ASSEMBLY THEN DRILL 9/32" CLEARANCE HOLES FOR 1/4" FASTENERS USING PIPE SUPPORT BRACKET (ITEM 12) AS TEMPLATE
TO P53 SEE VIEWS 'D' & 'E'
S35 ON CYL. CHANGEOVER PKG.
REF CHAMBER DRAIN
TO S3 REMOVE EXISTING PLUG AND REPLACE WITH ITEM #2
VIEW F-F
SHOWN WITHOUT VS23
9 7/16"
7 1/4"
1 1/16" R TYP
3/8" ODT
20 1/2"
SUGGESTED BEND DETAIL FOR
ITEM #18
9 1/2"
7 1/2"
SUGGESTED BEND DETAIL FOR
ITEM #17
TOLERANCE STANDARD UNLESS OTHERWISE NOTED
AMERICAN STERILIZER COMPANY ERIE, PENNSYLVANIA
ETO DISPOSER KIT ASS'Y 20" EAGLE 3000 GAS
FIRST MADE FOR:
146655-710
CAD DWG.

A- 5

A- 6

QUANTITY	PART NUMBER	ITEM NO.	PART NAME	DESCRIPTION, MATERIAL	REV	REV DATE
1	1 X 146655-7 01		DISPOSER KIT	EAGLE 3000 GAS	A	03-17-92

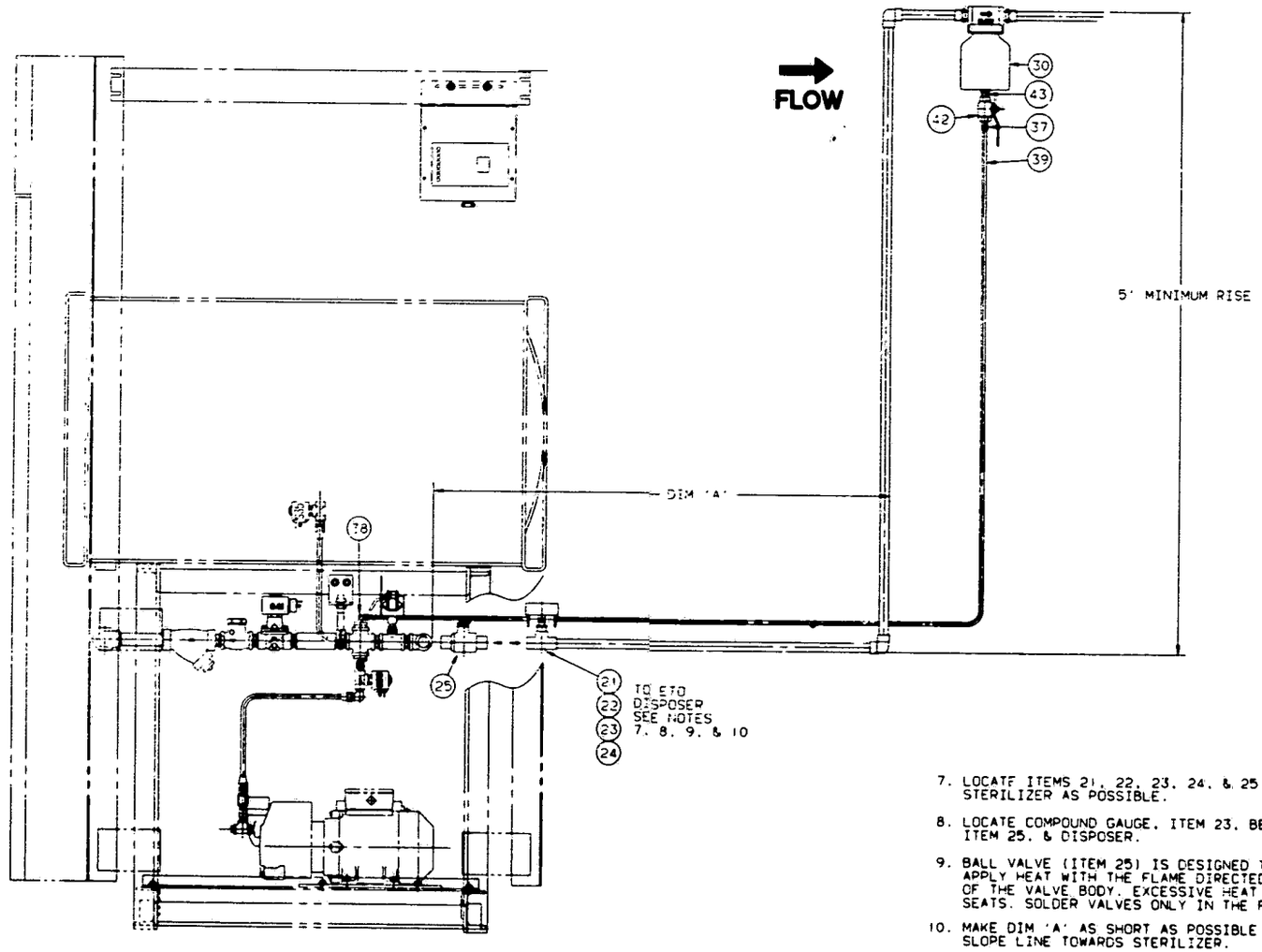

7. LOCATE ITEMS 21, 22, 23, 24, & 25 AS CLOSE TO STERILIZER AS POSSIBLE.

8. LOCATE COMPOUND GAUGE, ITEM 23, BETWEEN BALL VALVE, ITEM 25, & DISPOSER.

9. BALL VALVE (ITEM 25) IS DESIGNED TO BE SOFT SOLDERED. APPLY HEAT WITH THE FLAME DIRECTED AWAY FROM THE CENTER OF THE VALVE BODY. EXCESSIVE HEAT CAN HARM THE TEFLON SEATS. SOLDER VALVES ONLY IN THE FULLY CLOSED POSITION.

10. MAKE DIM 'A' AS SHORT AS POSSIBLE TO REDUCE WATER FORMATION. SLOPE LINE TOWARDS STERILIZER.

TOLERANCE STANDARD UNLESS OTHERWISE NOTED | FRACTIONAL ±1/64 DECIMAL ±.005 ANGULARITY ±1° MACH. SURF 125

AMERICAN STERILIZER COMPANY ERIE, PENNSYLVANIA

TITLE: ETO DISPOSER KIT ASS'Y 20" EAGLE 3000 GAS

FIRST MADE FOR:

DWG. NO. 146655-710 3 SHT 3

CAD DWG.

REF 136806-983

DWG NO 136807-904 | SHEET OF 1

NOTE:

1. USE PIPE SEALANT PER AMSCO DWG. 150822-020 ON ALL THREADED PIPE JOINTS.
2. LABEL VALVES AS SHOWN WITH BRADY TYPE MARKERS, BLACK LETTERS ON YELLOW BACKGROUND.

QUANTITY	PART NUMBER	ITEM NO	PART NAME	DESCRIPTION, MATERIAL	REV NO	REVISION DATE
	136807-904	1	VALVE ASSY	20" EAGLE 3000 GAS	5	03-02-92
1	93910-477	2	VALVE, SOL.	3/4" NPT		
1	150828-444	3	VALVE, CHECK	3/4" NPT		
1	129360-765	4	ORIFICE.FL.CONT.	3/4" NPT X 7/64 DIA ID		
1	47708-091	5	STRAINER	3/4" NPT		
1	84323-001	6	TEE, REDUCING	3/4" X 3/4" X 1/4"		
1	89986-091	7	ELL, UNION	3/4" NPT		
1	3440-091	8	PLUG, PIPE	1/4" NPT		
2	3439-091	9	PLUG, PIPE	1/8" NPT		
1	29293-091	10	NIPPLE, BRASS	3/4" NPT X 1 3/4" LG.		
6	29291-091	11	NIPPLE, BRASS	3/4" NPT X 1 1/4" LG.		
1	29304-091	12	NIPPLE, BRASS	3/4" NPT X 4 1/2" LG.		
1	77774-091	13	STRAINER.NIPPLE	1/4" NPT		
1	1345-091	14	CROSS	3/4" NPT		
3	22472-091	15	BUSHING, RED.	3/4" NPT X 1/4 NPT		
1	93910-481	16	VALVE, SOLENOID	1/4" NPT		
1	35931-091	17	FITTING.FLARE	1/4" NPT X 3/8"ODT		
2	35932-091	18	NUT.FLARE	3/8"ODT		
1	37896-091	19	FTG.FLARE-ELL	1/4" NPT X 3/8"ODT		
1	939-091	20	BUSHING, RED.	1/4" NPT X 1/8"NPT		
1	4932-091	21	TEE	3/4" NPT		

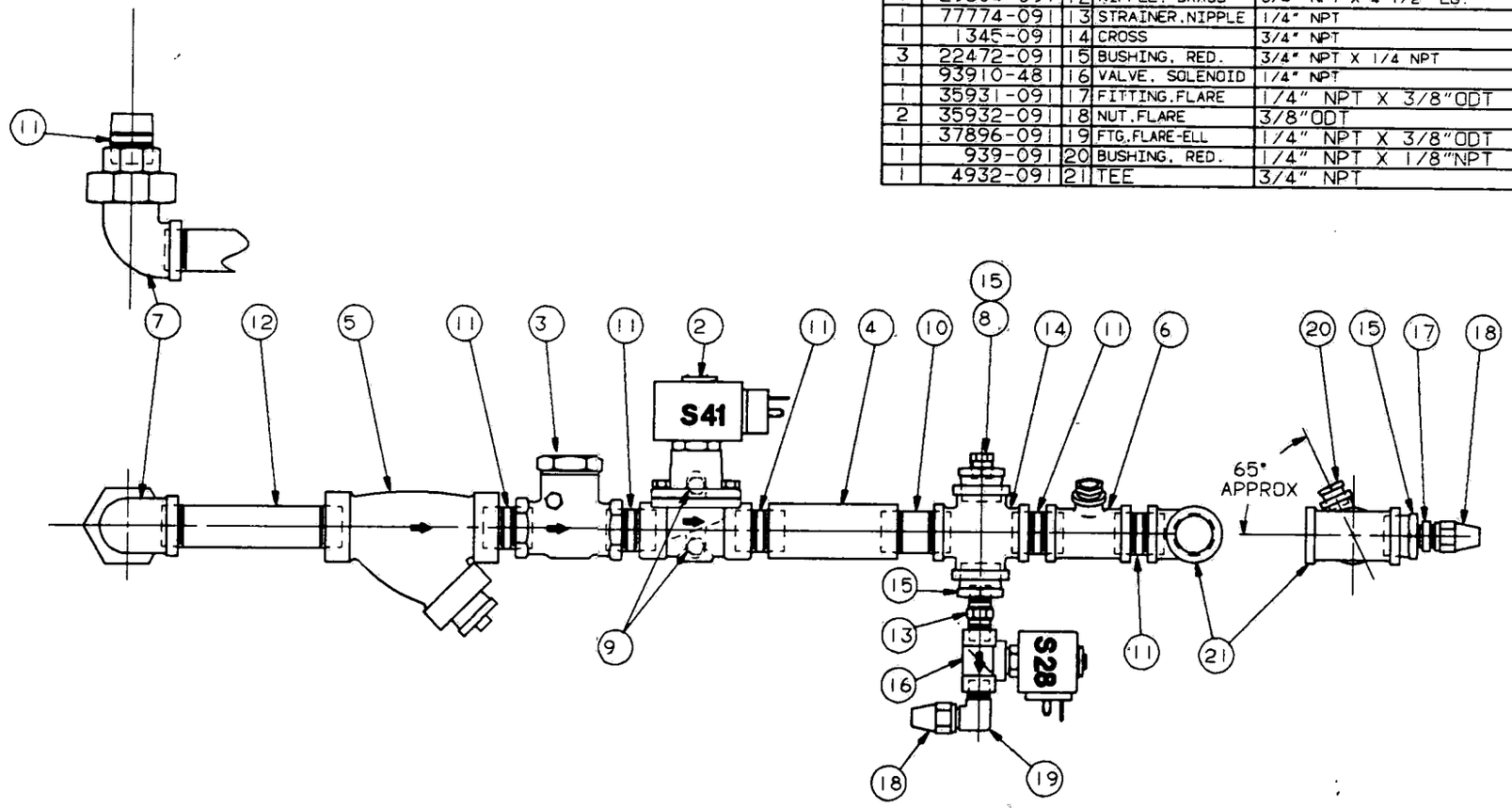

TOLERANCE STANDARD UNLESS OTHERWISE NOTED	FRACTIONAL ±1/64 DECIMAL ±.005 ANGULARITY±1° MACH. SURF 125

NO.	DATE	E.C.A. NUMBER	NO.	DATE	E.C.A. NUMBER
3	12-10-90	RA#386			
2	09-13-90	RA#346	5	03-02-92	920049
1	06-27-90	RA#285	4	11-18-91	910211
0	06-18-90	PER#63	3	12-10-90	910043

REVISIONS

AMSCO

AMERICAN STERILIZER COMPANY
ERIE, PENNSYLVANIA

THESE DRAWINGS, SPECIFICATIONS, AND ALL INFORMATION THEREON ARE THE PROPERTY OF AMERICAN STERILIZER COMPANY, ARE TO BE MAINTAINED CONFIDENTIAL, ARE NOT TO BE COPIED OR USED IN ANY WAY DETRIMENTAL TO THE INTEREST OF AMERICAN STERILIZER COMPANY, AND SHALL BE RETURNED UPON REQUEST.

DWN FD DATE 11-22-90 | CKD FD DATE 6-15-90 | DWG MEC DATE 6-18-90 | MFG SDN DATE 6-18-90

TITLE VALVE ASSY-20" GAS EAGLE 3000 W/DISPOSER

FIRST MADE FOR 146655-710

DWG NO 136807-904 | SHEET OF 1

SCALE 1/8

CAD DWG.

© AMSCO 1989

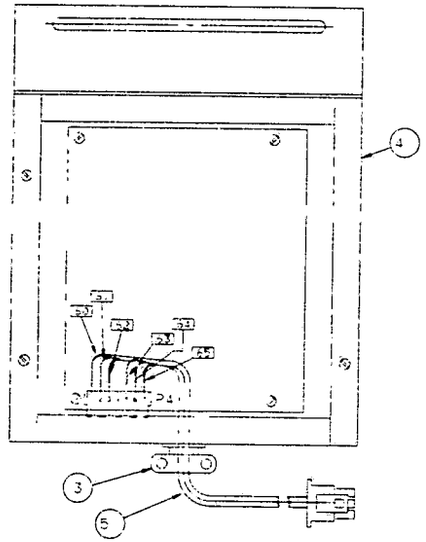

VIEW AA
INTERFACE BOX

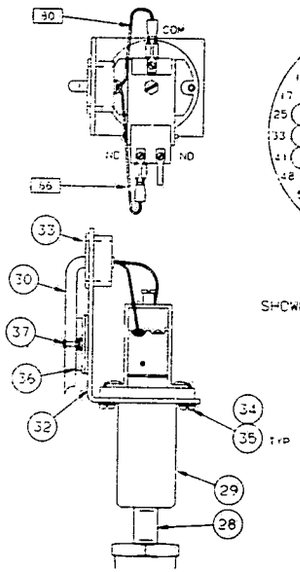

VIEW DD
VACUUM SWITCH

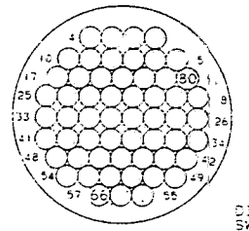

VIEW EE
P53
SHOWN ENLARGED FOR CLARITY

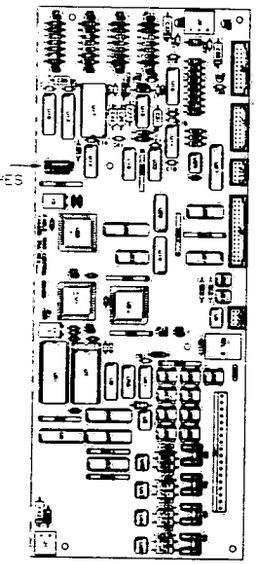

VIEW BB
CONTROL PC BOARD

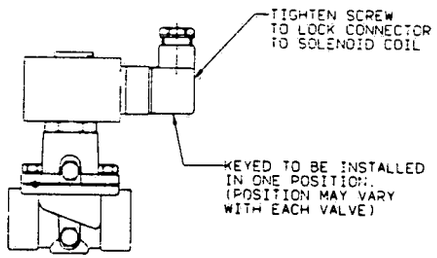

VIEW CC
TYP. SOLENOID HOOK-UP

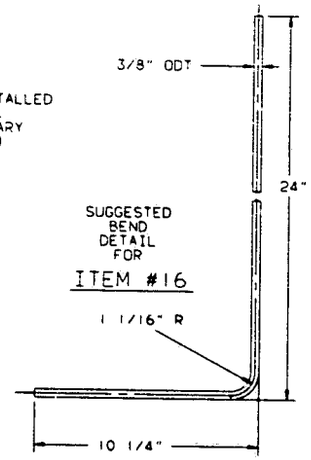

SUGGESTED BEND DETAIL FOR
ITEM #16

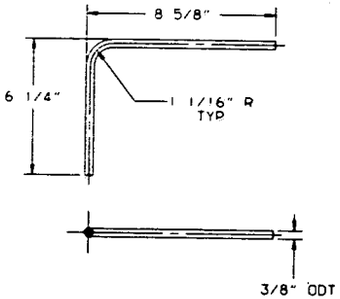

SUGGESTED BEND DETAIL FOR
ITEM #17

QUANTITY	PART NUMBER	ITEM	PART NAME	DESCRIPTION, MATERIAL
1	146655-711	1	DISPOSER KIT	24 X 36 EAGLE 3000
1	136807-905	2	VALVE ASS'Y	S41, S42
1	91354-045	3	CLAMP, CABLE	
1	136807-908	4	BOX, INTERFACE	
1	136807-906	5	HARNESS ASSY	
1		6		REF. DWG. P/N 146655-711
1	129362-138	7	INSTALL. INST	REF. DWG.
1	129362-139	8	EQUIP MANUAL	REF. DWG.
1	93910-145	9	WIRE CONN'S	REF. DWG. DISPOSER
1	150822-297	10	NIPPLE, STEEL	1/4 NPT X 5 3/4" LG. (SOLID)
1	93909-642	11	SUPPORT, PIPE	
1	39590-010	12	CLAMP, PIPE	3/4" NPT
2	1619-091	13	ELL, STREET	1/4 NPT
4	129361-716	14	SCREW, FLG LOCK	1/4-20 X 1" LG.
4	129360-015	15	NUT, FLG LOCK	1/4-20
1		16	TUBING, COPPER	3/8" ODT X 40" LG. SEE NOTE #2
1		17	TUBING, COPPER	3/8" ODT X 20" LG. SEE NOTE #2
1	3443-091	18	PLUG, PIPE	3/4" NPT
1	150828-262	19	VALVE, CHECK	
1	45589-091	20	COUPLING	1/4 NPT
1	37896-091	21	ELL, FLARE	1/4 NPT X 3/8 ODT
1	939-091	22	BUSHING, RED.	1/4 NPT X 1/8 NPT
1	76053-091	23	BUSHING, RED.	1/2 NPT X 1/4 NPT
1	90525-091	24	GAUGE	1/8 NPT
1	129356-508	25	TEE, SOLDER	3/4 X 3/4 X 1/2 NPT
1	93910-642	26	VALVE, BALL	3/4 SOLDER
1	764317-524	27	TAPE, TEFLON	
1	28899-091	28	NIPPLE, BRASS	1/8 NPT X 1"
1	83366-001	29	VACUUM SWITCH	
1	93910-654	30	CABLE, EXT.	
1	93910-653	31	TRAP, WATER	
1	93909-980	32	BRACKET	VACUUM SWITCH
1	76262-091	33	BUSHING, SNAP	
2	3984-041	34	SCREW	#6-32 X 3/8" LG.
2	19675-041	35	LOCKWASHER	
4	129326-001	36	MOUNT, HARNESS	
6	84104-001	37	TIE, WIRE	
1	34218-091	38	FITTING, STR.	1/4 ODT X 1/4" NPT
1	45407-091	39	ELL, COMP	1/4 ODT X 1/4 NPT
1		40	TUBING, COPPER	1/4 O.D. X 10'- 0" LG. SEE NOTE #4
1	146657-275	41	SCHEMATIC	
1	129362-980	42	GUIDELINES	
1	150822-048	43	VALVE, BALL	
1	28917-091	44	NIPPLE, BRASS	1/4" NPT X 1" LG.

NOTES:

1. USE PIPE SEALANT PER AMSCO DWG. 150822-020 ON ALL THREADED PIPE JOINTS.
2. COPPER TUBING .030 WALL X 3/8" ODT, SOFT ANNEALED, ASTM B280.
3. INCLUDE WITH EACH KIT ONE PRINT, P/N 146655-711.
4. COPPER TUBING .030 WALL X 1/4" O.D., SOFT ANNEALED, ASTM B280.
5. LABEL VACUUM SWITCH 'VS23', ITEM #29, WITH BRADY TYPE MARKERS, BLACK LETTERS ON YELLOW BACKGROUND.
6. SEE SHEET #3 FOR WATER TRAP INSTALLATION INSTRUCTIONS.

TOLERANCE STANDARD UNLESS OTHERWISE NOTED	FRACTIONAL ±1/64 ANGULARITY±1°	DECIMAL ±.005 MACH. SURF.
2 10-08-90 910043		
2 10-08-90 PA#361	5 03-16-92 920052	
1 07-31-90 PA#319	4 11-11-91 910211	
0 06-18-90 PER#63	3 07-12-91 910146	

AMERICAN STEEL ED COMPANY
ERIE, PENNSYLVANIA
AMSCO

TITLE: ETO DISPOSER KIT ASS'Y
24 X 36 EAGLE 3000
FIRST MADE FOR:
146655-711

CAD DWG.

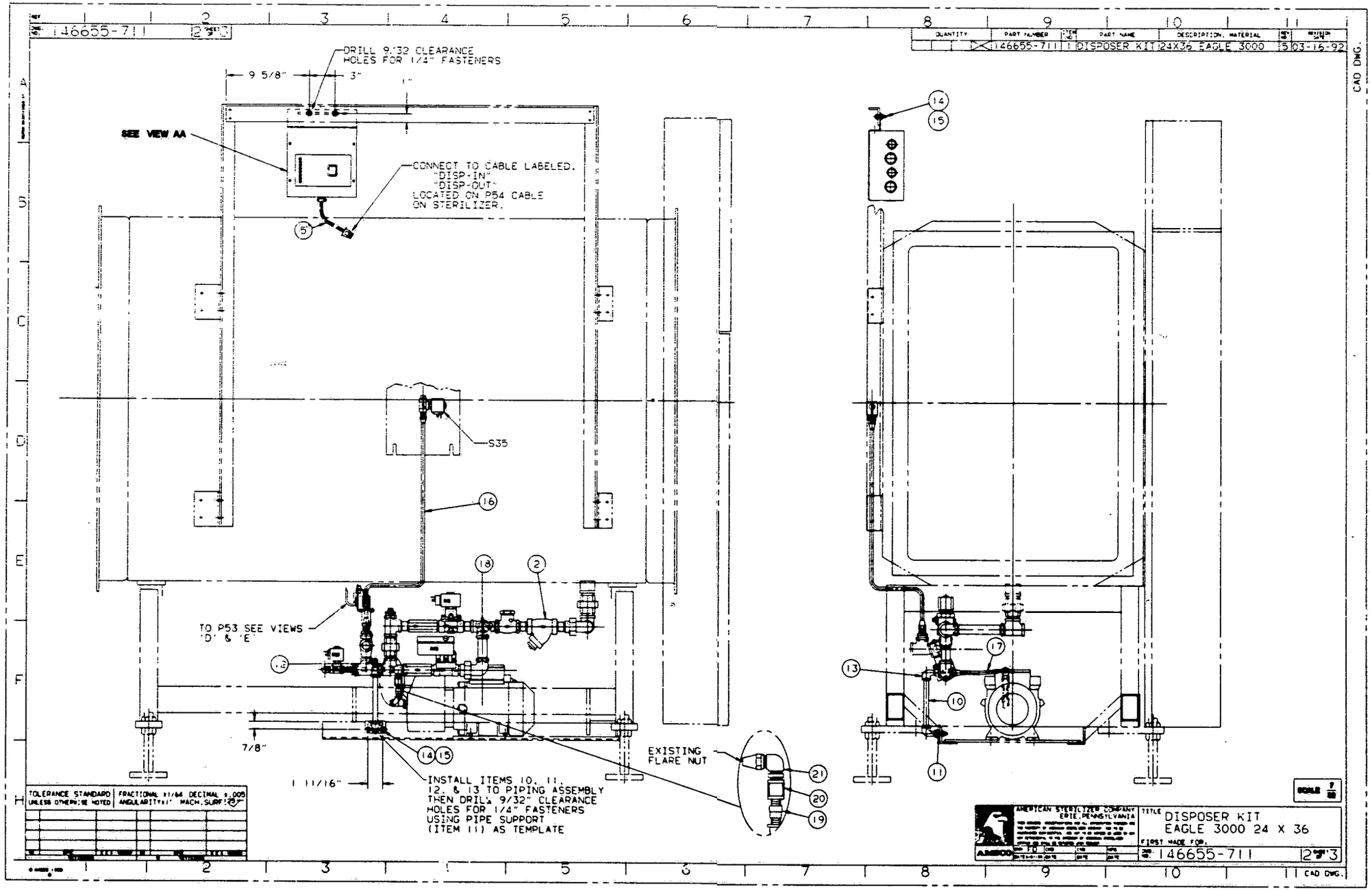
146655-711
QUANTITY
PART NUMBER
PART NAME
DESCRIPTION, MATERIAL
146655-711 1 DISPOSER KIT 24X36 EAGLE 3000 5 03-16-92
CAD DWG.
DRILL 9/32 CLEARANCE HOLES FOR 1/4" FASTENERS
9 5/8"
3"
SEE VIEW AA
CONNECT TO CABLE LABELED. "DISP-IN" "DISP-OUT" LOCATED ON P54 CABLE ON STERILIZER.
5
S35
16
18
2
TO P53 SEE VIEWS 'D' & 'E'
12
7/8"
14
15
1 11/16"
INSTALL ITEMS 10, 11, 12, & 13 TO PIPING ASSEMBLY THEN DRILL 9/32" CLEARANCE HOLES FOR 1/4" FASTENERS USING PIPE SUPPORT (ITEM 11) AS TEMPLATE
EXISTING FLARE NUT
21
20
19
13
10
11
17
TOLERANCE STANDARD UNLESS OTHERWISE NOTED
FRACTIONAL ±1/64 DECIMAL ±.005
ANGULARITY ±1°
MACH. SURF. 63
AMERICAN STERILIZER COMPANY ERIE, PENNSYLVANIA
TITLE
DISPOSER KIT
EAGLE 3000 24 X 36
FIRST MADE FOR
146655-711
2 OF 3
CAD DWG.

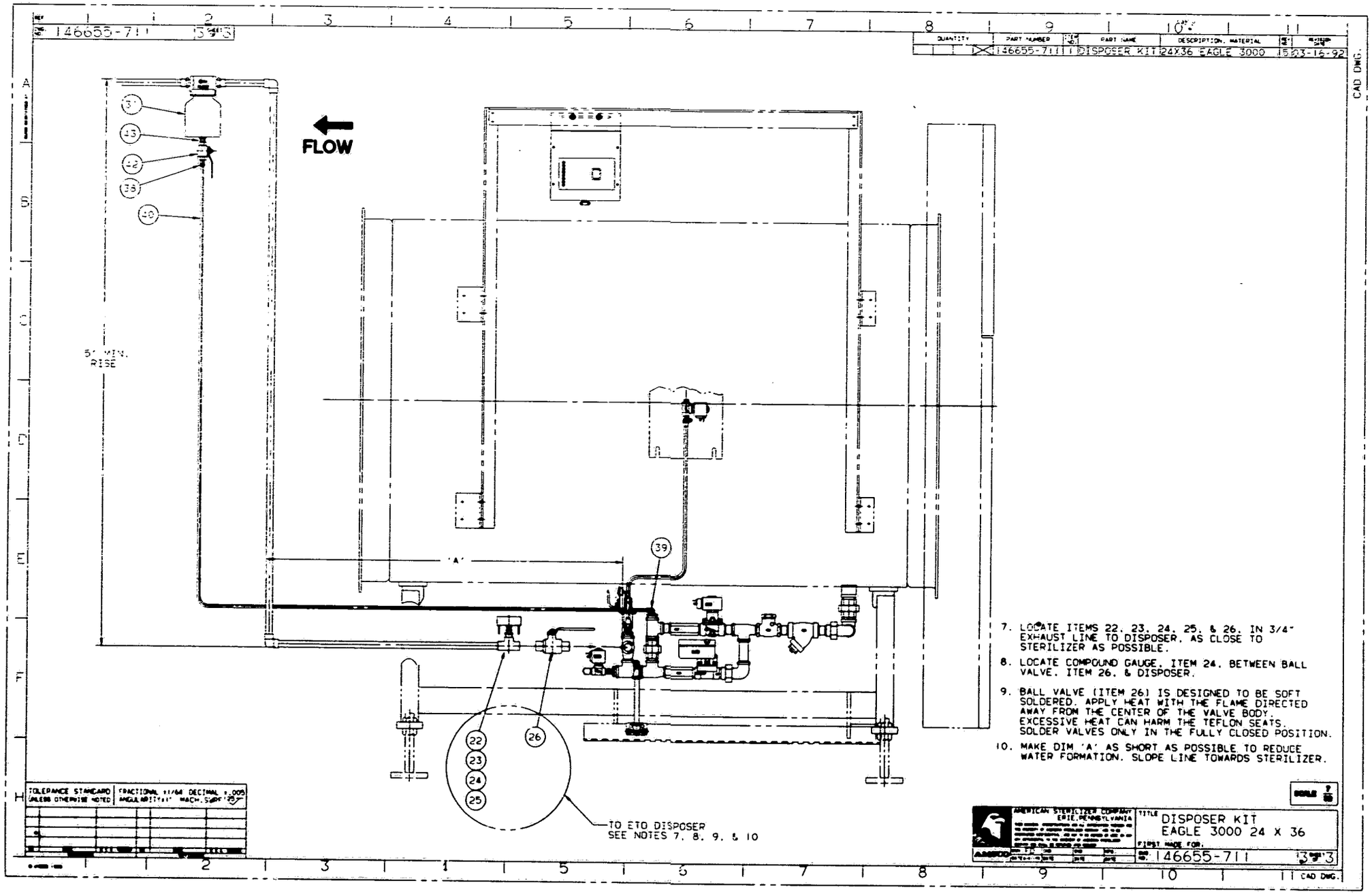
146655-711
QUANTITY
PART NUMBER
PART NAME
DESCRIPTION, MATERIAL
146655-711 1 DISPOSER KIT 24X36 EAGLE 3000 15 03-16-92
CAD DWG.
FLOW
5' MIN. RISE
'A'
31
43
42
38
40
39
22
23
24
25
26
TO ETO DISPOSER
SEE NOTES 7, 8, 9, & 10
7. LOCATE ITEMS 22, 23, 24, 25, & 26, IN 3/4" EXHAUST LINE TO DISPOSER, AS CLOSE TO STERILIZER AS POSSIBLE.
8. LOCATE COMPOUND GAUGE, ITEM 24, BETWEEN BALL VALVE, ITEM 26, & DISPOSER.
9. BALL VALVE (ITEM 26) IS DESIGNED TO BE SOFT SOLDERED. APPLY HEAT WITH THE FLAME DIRECTED AWAY FROM THE CENTER OF THE VALVE BODY. EXCESSIVE HEAT CAN HARM THE TEFLON SEATS. SOLDER VALVES ONLY IN THE FULLY CLOSED POSITION.
10. MAKE DIM 'A' AS SHORT AS POSSIBLE TO REDUCE WATER FORMATION. SLOPE LINE TOWARDS STERILIZER.
TOLERANCE STANDARD UNLESS OTHERWISE NOTED
FRACTIONAL ±1/64 DECIMAL ±.005
ANGULAR ±1/2° MACH. SURF. 125
AMERICAN STERILIZER COMPANY
ERIE, PENNSYLVANIA
TITLE
DISPOSER KIT
EAGLE 3000 24 X 36
FIRST MADE FOR
146655-711
CAD DWG.

B- 1

B- 2

REF 136807-661

DWG NO 136807-905 | SHEET OF 1

NOTES:

1. USE PIPE SEALANT PER AMSCO DWG. 150822-020 ON ALL THREADED PIPE JOINTS.
2. LABEL VALVES AS SHOWN WITH BRADY TYPE MARKERS, BLACK LETTERS ON YELLOW BACKGROUND.

QUANTITY	PART NUMBER	ITEM NO.	PART NAME	DESCRIPTION, MATERIAL	REV NO	REVISION DATE
X	136807-905	1	VALVE ASSY	24 X 36 UNITS	3	06-01-92
2	93910-477	2	VALVE, SOL.	3/4" NPT		
1	93910-481	3	VALVE, SOL.	1/4" NPT		
1	150828-444	4	VALVE, CHECK	3/4" NPT		
1	129360-765	5	ORIFICE,FL.CONT	3/4 NPT X .110 DIA ID		
1	129361-121	6	ORIFICE,FL.CONT	3/4 NPT X .082 DIA ID		
4	3439-091	7	PLUG, PIPE	1/8" NPT		
4	29293-091	8	NIPPLE, BRASS	3/4" NPT X 1 3/4" LG.		
1	4932-091	9	TEE	3/4" NPT		
5	29290-091	10	NIPPLE, BRASS	3/4" NPT X 1" LG.		
1	29309-091	11	NIPPLE, BRASS	3/4" NPT X 5 3/4"LG.		
1	29299-091	12	NIPPLE, BRASS	3/4" NPT X 3 1/4" LG		
5	91918-091	13	TEE,STREET	3/4" NPT		
1	47708-091	14	STRAINER	3/4" NPT		
1	129232-001	15	UNION	3/4" NPT		
1	11506-091	16	BUSHING, REDUCING	3/4" NPT X 1/8" NPT		
2	22472-091	17	BUSHING, REDUCING	3/4" NPT X 1/4" NPT		
2	89986-091	18	ELL,UNION	3/4" NPT		
1	77774-091	19	NIPPLE,STRAINER	1/4" NPT		
1	37896-091	20	ELBOW,FLARE	1/4" NPT X 3/8 ODT		
2	35932-091	21	NUT,FLARE	3/8" ODT		
1	35931-091	22	FITTING, FLARE	1/4" NPT X 3/8 ODT		
1	3440-091	23	PLUG, PIPE	1/4" NPT		

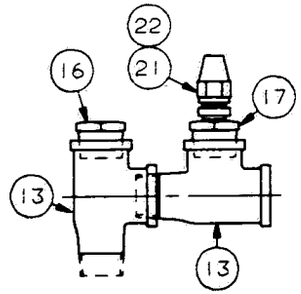

VIEW A-A

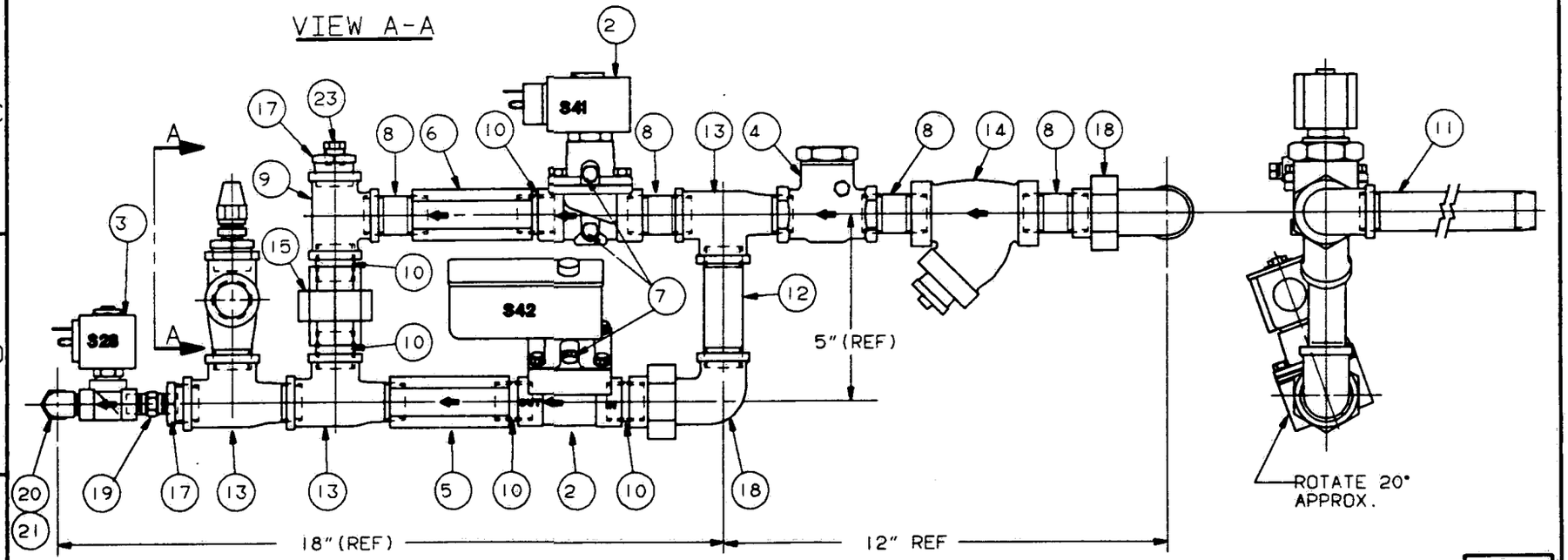

TOLERANCE STANDARD UNLESS OTHERWISE NOTED | FRACTIONAL ±1/64 DECIMAL ±.005 ANGULARITY±1° MACH. SURF 125

NO.	DATE	E.C.A. NUMBER	NO	DATE	E.C.A. NUMBER
2	03-02-92	920049			
1	09-13-90	910043			
1	09-13-90	RA#347			
0	06-18-90	PER#63	3	06-01-92	920081

REVISIONS

SCALE 1/2

AMERICAN STERILIZER COMPANY
ERIE, PENNSYLVANIA

TITLE VALVE ASS'Y 24 X 36 EAGLE 3000 W/DISPOSER

FIRST MADE FOR 146655-711

DWN FD DATE 5-31-90 | CKD FD DATE 6-15-90 | DWG MEC DATE 6-18-90 | MFG. SDN DATE 6-18-90

DWG NO 136807-905 | SHEET OF 1

© AMSCO 1989

B-3 B-4

CAD DWG.

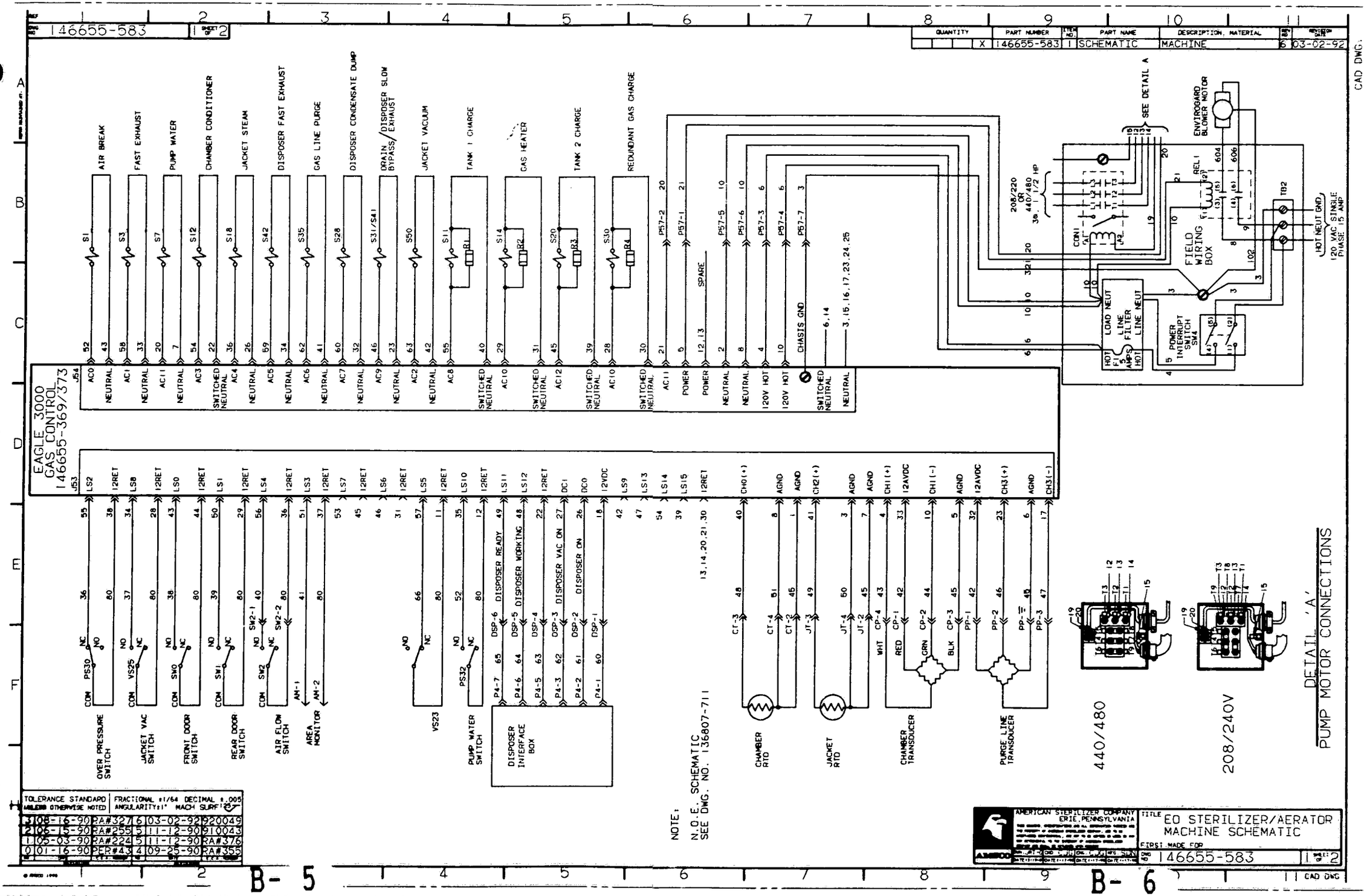
146655-583
QUANTITY | PART NUMBER | ITEM NO. | PART NAME | DESCRIPTION, MATERIAL | REV. | REVISION DATE
X | 146655-583 | 1 | SCHEMATIC | MACHINE | 6 | 03-02-92
CAD DWG.
EAGLE 3000 GAS CONTROL 146655-369/373
AIR BREAK
FAST EXHAUST
PUMP WATER
CHAMBER CONDITIONER
JACKET STEAM
DISPOSER FAST EXHAUST
GAS LINE PURGE
DISPOSER CONDENSATE DUMP
DRAIN /DISPOSER SLOW BYPASS/ EXHAUST
JACKET VACUUM
TANK 1 CHARGE
GAS HEATER
TANK 2 CHARGE
REDUNDANT GAS CHARGE
SPARE
CHASIS GND
SEE DETAIL A
ENVIROGARD BLOWER MOTOR
208/220 OR 440/480 3ø, 1 1/2 HP
FIELD WIRING BOX
LOAD NEUT
LINE FILTER
LINE NEUT
POWER INTERRUPT SWITCH SW4
120 VAC SINGLE PHASE 15 AMP
HOT NEUT GND
OVER PRESSURE SWITCH
JACKET VAC SWITCH
FRONT DOOR SWITCH
REAR DOOR SWITCH
AIR FLOW SWITCH
AREA MONITOR
VS23
PUMP WATER SWITCH
DISPOSER INTERFACE BOX
DISPOSER READY
DISPOSER WORKING
DISPOSER VAC ON
DISPOSER ON
CHAMBER RTD
JACKET RTD
CHAMBER TRANSDUCER
PURGE LINE TRANSDUCER
440/480
208/240V
DETAIL 'A'
PUMP MOTOR CONNECTIONS
NOTE:
N.O.E. SCHEMATIC
SEE DWG. NO. 136807-711
TOLERANCE STANDARD UNLESS OTHERWISE NOTED | FRACTIONAL ±1/64 DECIMAL ±.005 ANGULARITY±1° MACH SURF
3 06-16-90 RA#327 6 03-02-92 920049
2 06-15-90 RA#255 5 11-12-90 910043
1 05-03-90 RA#224 5 11-12-90 RA#376
0 01-16-90 PER#43 4 09-25-90 RA#355
AMERICAN STERILIZER COMPANY ERIE, PENNSYLVANIA
TITLE EO STERILIZER/AERATOR MACHINE SCHEMATIC
FIRST MADE FOR
DWG NO 146655-583
B- 5
B- 6

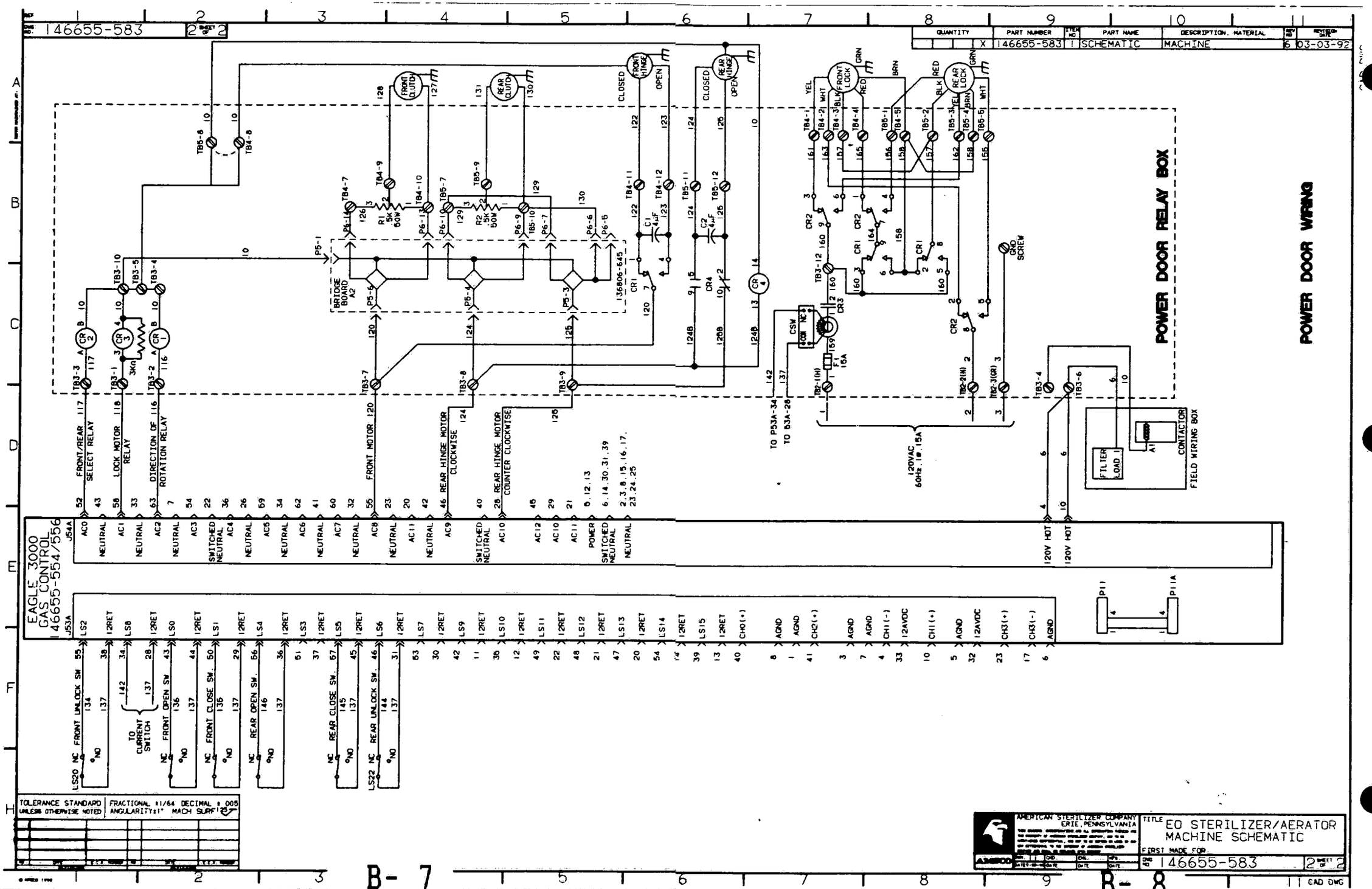
146655-583
2 SHEET OF 2
QUANTITY
PART NUMBER
PART NAME
DESCRIPTION, MATERIAL
146655-583
SCHEMATIC
MACHINE
03-03-92
POWER DOOR RELAY BOX
POWER DOOR WIRING
EAGLE 3000
GAS CONTROL
146655-554/556
J54A
J53A
FRONT/REAR SELECT RELAY
LOCK MOTOR RELAY
DIRECTION OF ROTATION RELAY
FRONT MOTOR
REAR HINGE MOTOR CLOCKWISE
REAR HINGE MOTOR COUNTER CLOCKWISE
BRIDGE BOARD A2
136806-645
FRONT CLUTCH
REAR CLUTCH
FRONT HINGE
REAR HINGE
FRONT LOCK
REAR LOCK
CLOSED
OPEN
CSW
F1 15A
120VAC 60Hz, 1Ø, 15A
TO P53A-34
TO P53A-26
GND SCREW
FILTER LOAD
CONTACTOR
FIELD WIRING BOX
120V HOT
NEUTRAL
SWITCHED NEUTRAL
POWER
FRONT UNLOCK SW
FRONT OPEN SW
FRONT CLOSE SW
REAR OPEN SW
REAR CLOSE SW
REAR UNLOCK SW
TO CURRENT SWITCH
TOLERANCE STANDARD UNLESS OTHERWISE NOTED
FRACTIONAL ±1/64 DECIMAL ±.005
ANGULARITY±1° MACH SURF 63
AMERICAN STERILIZER COMPANY
ERIE, PENNSYLVANIA
TITLE
EO STERILIZER/AERATOR
MACHINE SCHEMATIC
FIRST MADE FOR
146655-583
2 SHEET OF 2
CAD DWG
B- 7
B- 8

QUANTITY				PART NUMBER	ITEM NO	PART NAME	DESCRIPTION, MATERIAL	REV NO	REVISION DATE
			X	146657-275	1	SCHEMATIC	3000 INTERFACE	0	03-18-92

DWG NO 146657-275 SHEET 1 OF 1

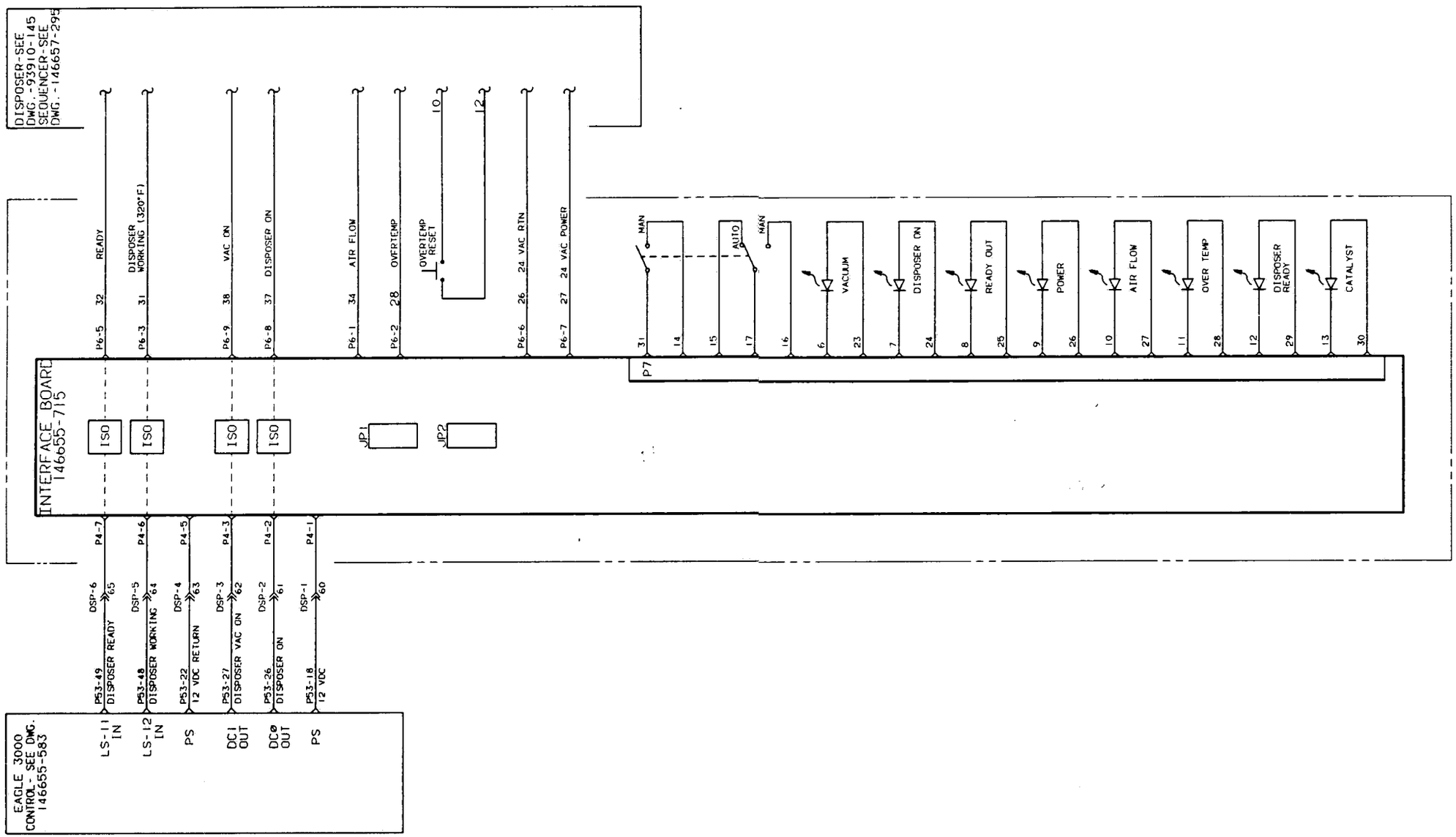

TOLERANCE STANDARD UNLESS OTHERWISE NOTED | FRACTIONAL ±1/64 DECIMAL ± .005 ANGULAR ±1° MACH SURF 125

REV	DATE	DRAWN	CHECKED	ENGR	MFG
0	03-18-92	920052			

AMSCO — AMERICAN STERILIZER COMPANY ERIE, PENNSYLVANIA

TITLE: EAGLE 3000 DISPOSER/ SEQUENCER INTERFACE

FIRST MADE FOR

DWG NO 146657-275 SHEET 1 OF 1

CAD DWG.

DWG. NO 136807-908 | SHEET OF

QUANTITY	PART NUMBER	ITEM NO.	PART NAME	DESCRIPTION, MATERIAL	REV NO	REVISION DATE
X	136807-908	1	INTERFACE BOX		1	02-21-91
1	136806-996	2	BOX MODIFICATION			
1	146655-715	3	PC BOARD ASSY.			
1	93910-078	4	BRACKET, MTG.			
8	129361-013	5	LED, SNAP-IN			
1	93909-993	6	SWITCH, ROCKER			
4	129361-680	7	STANDOFF,	M/F-#6-32 X 7/16" LG		
4	93908-039	8	SCREW, SEMS	#6-32 X 3/8" LG		
4	50527-061	9	SCREW, SOC.HD.	#8-32 X 1/2" LG		
2	17796-091	10	WASHER, FLAT	.203 ID X .438 OD X .031 THK		
4	129359-531	11	NUT, KEPS	#8-32		
1	56396-486	12	HOUSING, PLUG	34 POS DOUBLE ROW		
21	150822-810	13	CONTACT, SOCKET			
5	150476-410	14	REC.,FAST ON	.032 X .250 TAB 22/18 AWG		
		15	WIRE, BLACK	6'4" LG. SEE NOTES #1, 2 & 3		
1	129326-001	16	HARNESS MOUNT			
1	84104-001	17	TIE WRAP			
1	93910-111	18	LABEL			
1	129361-020	19	PLUG, 7 POS.	P4		
1	129361-113	20	SWITCH,RESET			
1	93910-137	21	BRACKET,SW.			
2	129266-001	22	TUBING,HYSHRINK			
1	129361-021	23	PLUG, 9 POS.	P6		
4	84121-002	24	NUT, KEPS	#6-32		

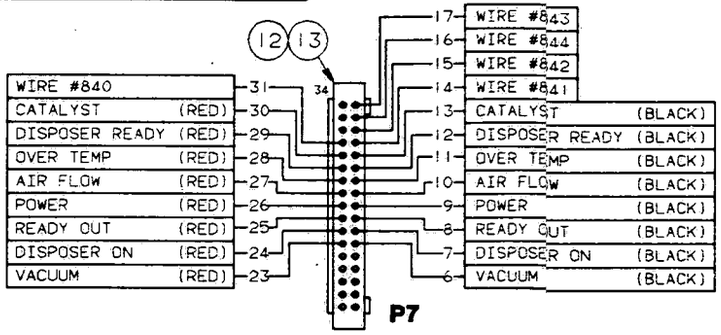

VIEW B-B
SCALE 1.5:1

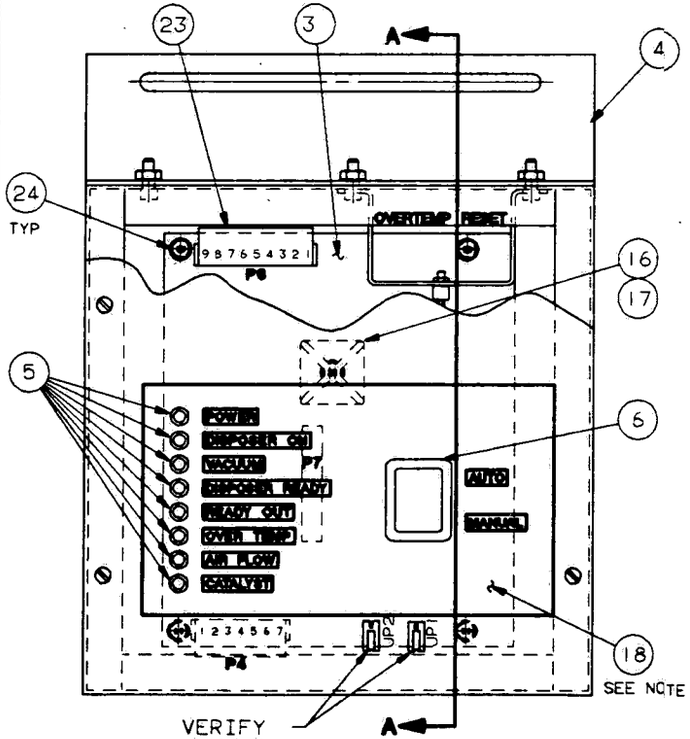

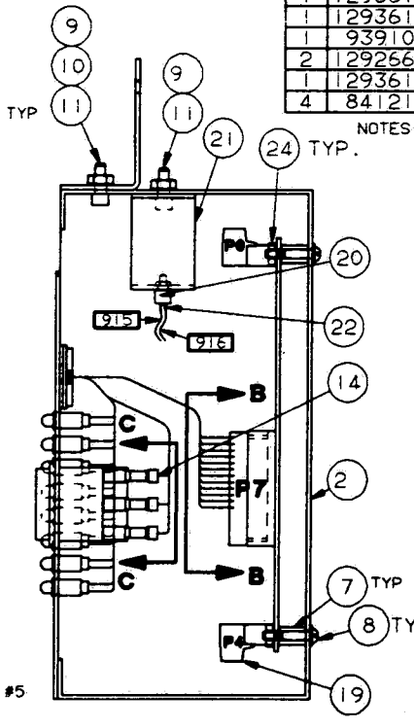

SECTION A-A

NOTES:
1. WIRE #22 GA STRANDED COPPER, 19/34 STRANDING, TEFLON INSULATION, U.L.(STYLE 1213, 300 V, 105°C)AND CSA (APPLIANCE WIRE,.010 THK INSULATION, 150V,150°C) LABELS REQ,D.
2. SWITCH WIRES TO BE MARKED ONCE IN CENTER, USING BRADY TYPE MARKERS BLACK LETTERS ON WHITE BACKGROUND.
3. BLACK WIRE, ITEM #15, CUT INTO 5 PIECES 12"±1/8 LG. & 2 PIECES 8"±1/8 LG.
4. CONNECTION METHOD "A", ITEM #13, STRIP 3/16"
   CONNECTION METHOD "B", ITEM #14, STRIP 1/4"
   CONNECTION METHOD "C", SOLDER - STRIP 1/4" AND TIN.
5. CAREFULLY APPLY COVER LABEL, ITEM #18, BEFORE WIRING SWITCH, ITEM 6, AND LED LIGHTS, ITEM #5.
6. ALL SOLDER MATERIAL SHALL BE IN ACCORDANCE WITH AMSCO DWG. 52595.
7. LABEL COMPONENTS AS SHOWN WITH BRADY TYPE MARKERS, BLACK LETTERS ON YELLOW BACKGROUND.

WIRE #	FROM	CONN METH	TO	CONN METH
840	SW POS-2	B	P7-31	A
841	SW POS-3	B	P7-14	A
842	SW POS-4	B	P7-15	A
843	SW POS-5	B	P7-17	A
844	SW POS-6	B	P7-16	A
915	RESET SWITCH	C	---	---
916	RESET SWITCH	C	---	---
BLK LEAD	AIR FLOW LED	---	P7-10	A
RED LEAD	AIR FLOW LED	---	P7-27	A
BLK LEAD	CATALYST LED	---	P7-13	A
RED LEAD	CATALYST LED	---	P7-30	A
BLK LEAD	DISP. ON LED	---	P7-7	A
RED LEAD	DISP. ON LED	---	P7-24	A
BLK LEAD	DISP. READY LED	---	P7-12	A
RED LEAD	DISP. READY LED	---	P7-29	A
BLK LEAD	OVER TEMP LED	---	P7-11	A
RED LEAD	OVER TEMP LED	---	P7-28	A
BLK LEAD	POWER LED	---	P7-9	A
RED LEAD	POWER LED	---	P7-26	A
BLK LEAD	READY OUT LED	---	P7-8	A
RED LEAD	READY OUT LED	---	P7-25	A
BLK LEAD	VACUUM LED	---	P7-6	A
RED LEAD	VACUUM LED	---	P7-23	A

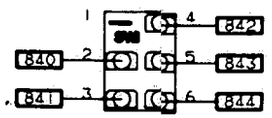

VIEW C-C
SCALE 1:1

TOLERANCE STANDARD UNLESS OTHERWISE NOTED | FRACTIONAL ±1/64 DECIMAL ±.005 ANGULARITY±1° MACH. SURF 125

NO.	DATE	E.C.A. NUMBER	NO.	DATE	E.C.A. NUMBER
1	02-21-91	910043			
0	07-26-90	900200			
0	07-26-90	PER#30			

REVISIONS

© AMSCO 1989

AMERICAN STERILIZER COMPANY
ERIE, PENNSYLVANIA

THIS DRAWING, SPECIFICATIONS AND ALL INFORMATION THEREON ARE THE PROPERTY OF AMERICAN STERILIZER COMPANY, ARE TO BE MAINTAINED CONFIDENTIAL, ARE NOT TO BE COPIED OR USED IN ANY WAY DETRIMENTAL TO THE INTEREST OF AMERICAN STERILIZER COMPANY AND SHALL BE RETURNED UPON REQUEST.

DWN NRF DATE 7-26-90 | CHKD DATE | ENG DATE | MFG DATE

TITLE
INTERFACE BOX ASS'Y.
EAGLE 3000/GAS W/DISPOSER

FIRST MADE FOR 146655-710/711

DWG NO 136807-908 | SHEET OF

SCALE 3/4 1

CAD DWG.

REF. DWG. NO.	SHEET OF
136807-670	1 / 3

QUANTITY	PART NUMBER	ITEM NO.	PART NAME	DESCRIPTION, MATERIAL	REV NO	REVISION DATE
X	136807-670	1	WIRING	AERATOR W/DISPOSER	2	10-08-90

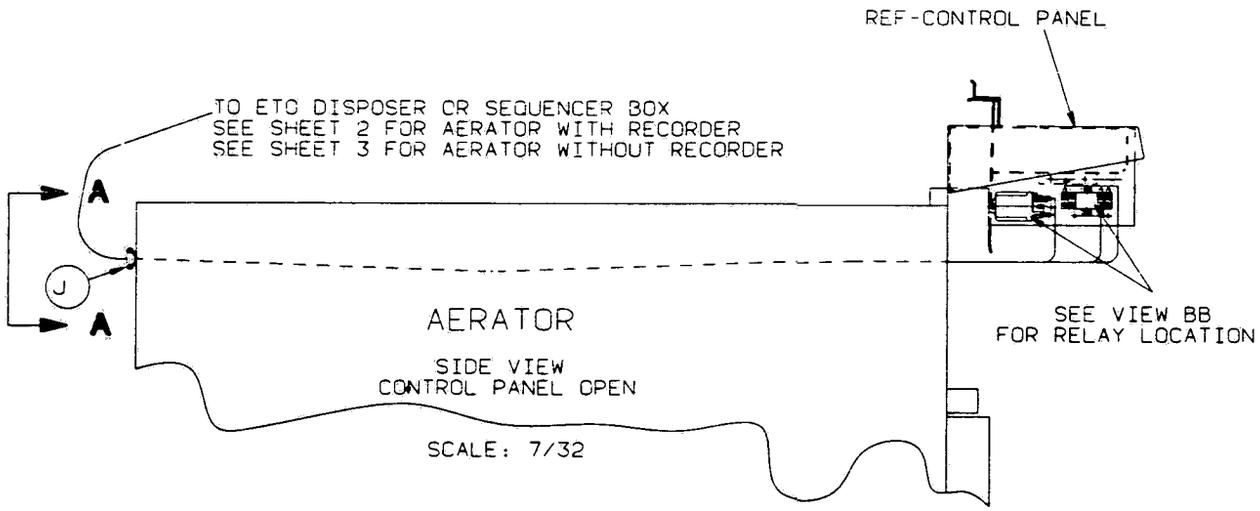

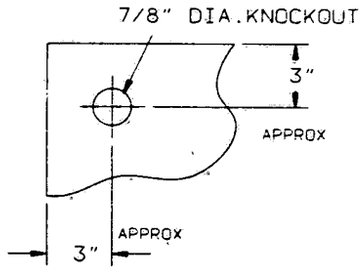

REAR VIEW
KNOCKOUT LOCATION
VIEW AA
SCALE: 1/4"

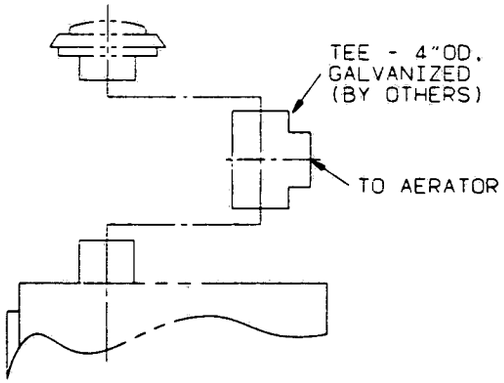

ETO DISPOSER
SIDE VIEW
SCALE: 1/8"

REFERENCE AERATOR KIT, P/N 129361-129

- A - RELAY CR3 (84413-001)
- B - SOCKET CR3 (84412-001)
- C - RELAY CR4 (93910-147)
- D - SPADE TERMINAL
- E - QUICK CONNECT TERMINAL, 18 AWG
- F - QUICK CONNECT TERMINAL, 12 AWG
- G - SELF TAP SCREW
- H - WIRE NUT
- J - CORD CLAMP
- K - FAST-ON TERMINAL
- L - RING TERMINAL, 12 AWG

GENERAL NOTES:
1. APPLY WIRE NUMBERS SHOWN TO KIT WIRES.
2. CABLE FROM AERATOR TO SEQUENCER OR DISPOSER BY OTHERS. CABLE TO BE SUITABLE FOR 24VAC CONTROL CIRCUITRY. STRANDED, 22 AWG, 4 CONDUCTOR, AND JACKETED.

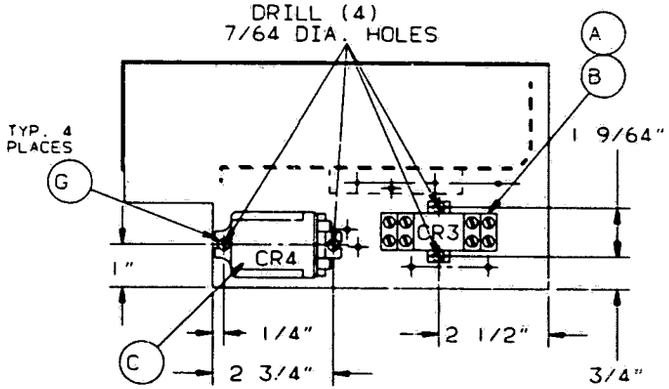

LOCATING DIMENSIONS
FOR CR3 AND CR4
VIEW BB
SCALE: 1/2"

TOLERANCE STANDARD UNLESS OTHERWISE NOTED	FRACTIONAL ±1/64 DECIMAL ±.005 ANGULARITY±1° MACH. SURF 125

REV	DATE	E.C.A. NUMBER	REV	DATE	E.C.A. NUMBER
2	10-08-90	900200			
2	10-08-90	RA#167			
1	09-06-89	RA #53			
0	6-20-89	PER 25			

REVISIONS

AMERICAN STERILIZER COMPANY
ERIE, PENNSYLVANIA

DWN JMT-G DATE 6-12-89 | CKD JMT-G DATE 6-20-89 | ENG LML DATE 6-20-89 | MFG | DATE

TITLE
WIRING CONNECTIONS
AERATOR W/DISPOSER

FIRST MADE FOR:

DWG. NO. 136807-670 | SHEET 1 OF 3

© AMSCO 1989

CAD DWG.

REF. DWG NO.	SHEET OF
136807-670	2 OF 3

QUANTITY	PART NUMBER	ITEM NO	PART NAME	DESCRIPTION, MATERIAL	REV NO	REVISION DATE
X	136807-670	1	WIRING	AERATOR W/DISPOSER	2	10-08-90

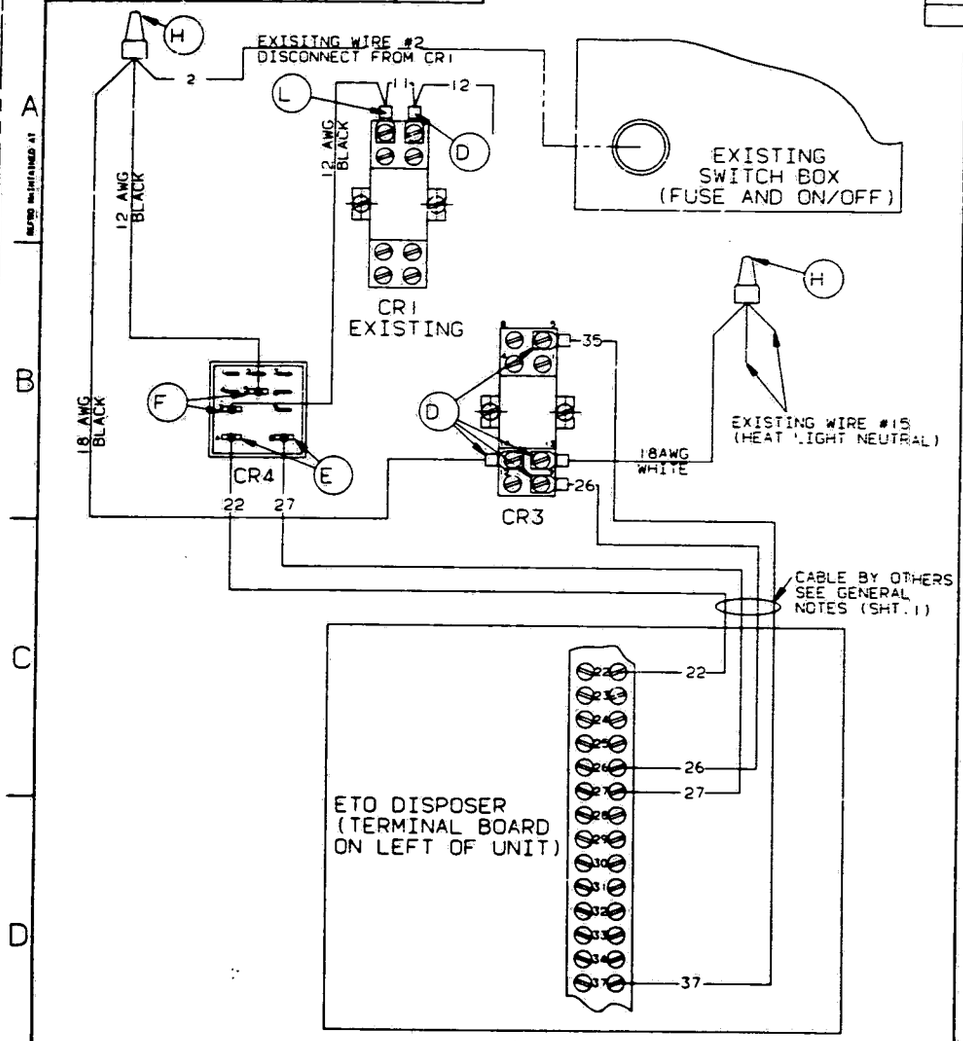

WIRING TO DISPOSER
(NO SEQUENCER CONTROL PRESENT)

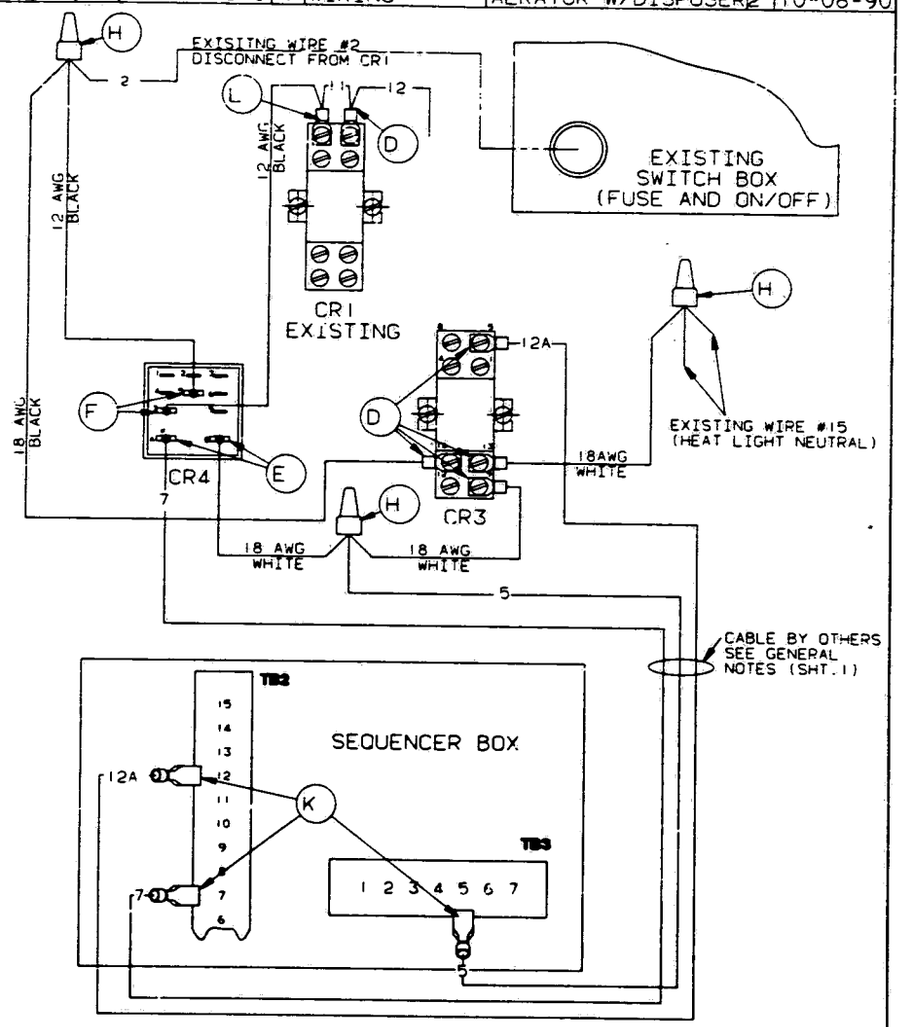

WIRING TO SEQUENCER

AERATOR WITH RECORDER

NOTES:

1. DISCONNECT EXISTING WIRE #2 FROM CR1 AND WIRENUT TO KIT WIRES AS SHOWN.
2. AERATOR MUST BE WIRED TO SEQUENCER CONTROL IF PRESENT.
3. SPLICE CR3 RELAY COIL NEUTRAL (WHITE) INTO EXISTING 'HEAT' LIGHT NEUTRAL (WHITE).
4. WIRES 11,12 SHOWN AT CR1 RELAY FOR REFERENCE ONLY (EXISTING).

TOLERANCE STANDARD UNLESS OTHERWISE NOTED	FRACTIONAL ±1/64 DECIMAL ±.005 ANGULARITY±1° MACH.SURF 125

NO	DATE	ECN NUMBER	NO	DATE	ECN NUMBER
REVISIONS			REVISIONS		

© AMSCO 1989

AMERICAN STERILIZER COMPANY
ERIE, PENNSYLVANIA

AMSCO

DWN JMT-G	CKD JMT-G	ENG LML	MFG
DATE 6-19-89	DATE 6-20-89	DATE 6-20-89	DATE

TITLE
WIRING CONNECTIONS
AERATOR W/DISPOSER

FIRST MADE FOR:

DWG. NO. 136807-670 SHEET 2 OF 3

CAD DWG.

C-1 C-2

REF.	DWG. NO.	SHEET OF
	136807-670	3 OF 3

QUANTITY	PART NUMBER	ITEM NO.	PART NAME	DESCRIPTION, MATERIAL	REV NO	REVISION DATE
X	136807-670	1	WIRING	AERATOR W/DISPOSER	2	10-08-90

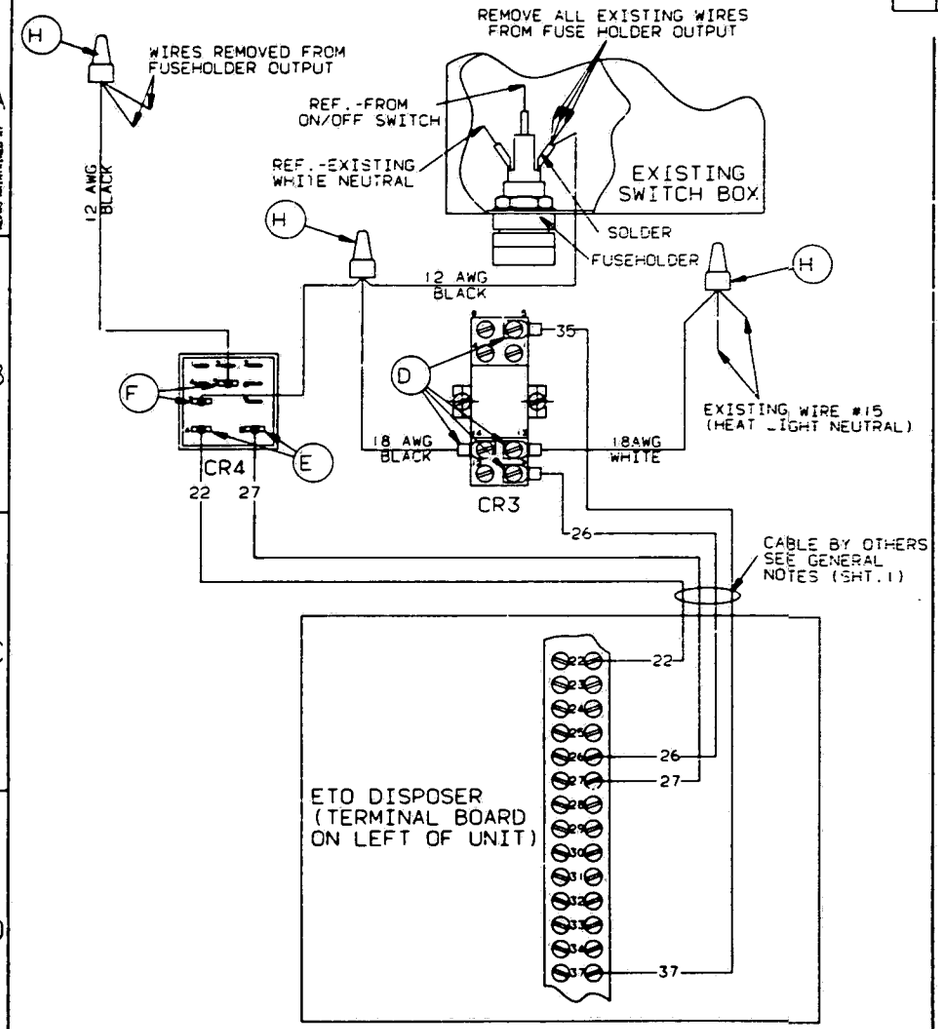

WIRING TO DISPOSER
(NO SEQUENCER CONTROL PRESENT)

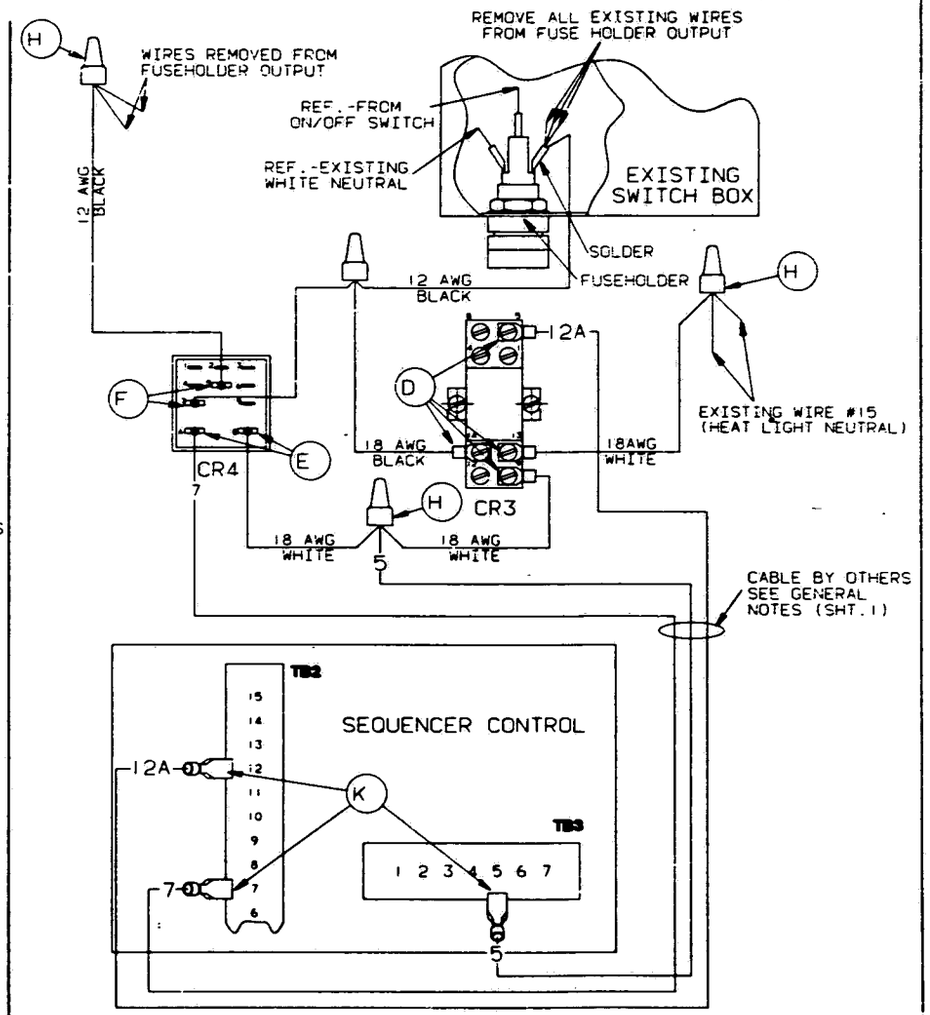

WIRING TO SEQUENCER

AERATOR WITHOUT RECORDER

NOTES:
1. REMOVE ALL WIRES FROM FUSEHOLDER OUTPUT (SHOULD BE LABELED 2, 2A, 2B) AND WIRENUT TO KIT WIRES AS SHOWN.
2. SOLDER KIT WIRE TO FUSEHOLDER AS SHOWN. THIS WILL BE ONLY WIRE ON FUSEHOLDER OUTPUT.
3. AERATOR MUST BE WIRED TO SEQUENCER IF PRESENT.

TOLERANCE STANDARD UNLESS OTHERWISE NOTED	FRACTIONAL ±1/64 DECIMAL ±.005 ANGULARITY±1° MACH.SURF 125

AMERICAN STERILIZER COMPANY
ERIE, PENNSYLVANIA

TITLE: WIRING CONNECTIONS AERATOR W/DISPOSER

FIRST MADE FOR:

DWG. NO. 136807-670 SHEET 3 OF 3

DWN JMT-G DATE 6-12-90 | CHD JMT-G DATE 6-20-90 | ENG LML DATE 6-20-90 | MFG DATE

© AMSCO 1990

C-3 C-4 CAD DWG.

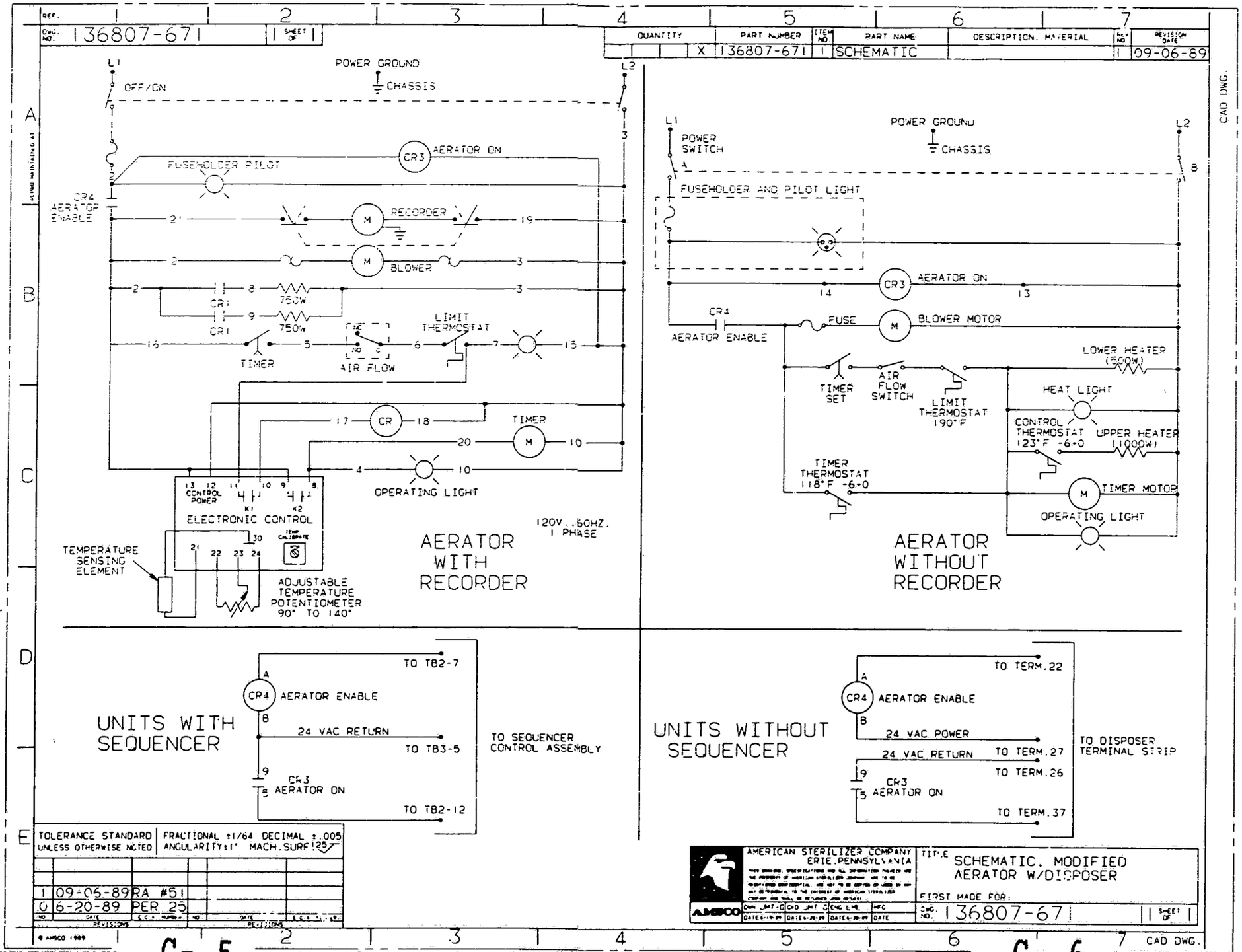
DWG. NO. 136807-671
SHEET OF 1
QUANTITY | PART NUMBER | ITEM NO. | PART NAME | DESCRIPTION, MATERIAL | REV NO | REVISION DATE
X | 136807-671 | 1 | SCHEMATIC | | 1 | 09-06-89
POWER GROUND
CHASSIS
L1
L2
OFF/ON
FUSEHOLDER PILOT
CR3 AERATOR ON
CR4 AERATOR ENABLE
RECORDER
BLOWER
CR1
750W
LIMIT THERMOSTAT
TIMER
AIR FLOW
CR
OPERATING LIGHT
CONTROL POWER
ELECTRONIC CONTROL
TEMPERATURE SENSING ELEMENT
ADJUSTABLE TEMPERATURE POTENTIOMETER 90° TO 140°
120V., 60HZ. 1 PHASE
AERATOR WITH RECORDER
POWER SWITCH
FUSEHOLDER AND PILOT LIGHT
FUSE
BLOWER MOTOR
AERATOR ENABLE
TIMER SET
AIR FLOW SWITCH
LIMIT THERMOSTAT 190°F
LOWER HEATER (500W)
HEAT LIGHT
CONTROL THERMOSTAT 123°F -6+0
UPPER HEATER (1000W)
TIMER THERMOSTAT 118°F -6+0
TIMER MOTOR
AERATOR WITHOUT RECORDER
UNITS WITH SEQUENCER
TO TB2-7
24 VAC RETURN
TO TB3-5
TO TB2-12
TO SEQUENCER CONTROL ASSEMBLY
UNITS WITHOUT SEQUENCER
TO TERM.22
24 VAC POWER
24 VAC RETURN
TO TERM.27
TO TERM.26
TO TERM.37
TO DISPOSER TERMINAL STRIP
TOLERANCE STANDARD UNLESS OTHERWISE NOTED
FRACTIONAL ±1/64 DECIMAL ±.005 ANGULARITY±1° MACH.SURF 125
1 09-06-89 RA #51
0 6-20-89 PER 25
REVISIONS
© AMSCO 1989
AMERICAN STERILIZER COMPANY ERIE, PENNSYLVANIA
AMSCO
TITLE SCHEMATIC, MODIFIED AERATOR W/DISPOSER
FIRST MADE FOR:
DWG. NO. 136807-671
SHEET OF 1
CAD DWG.

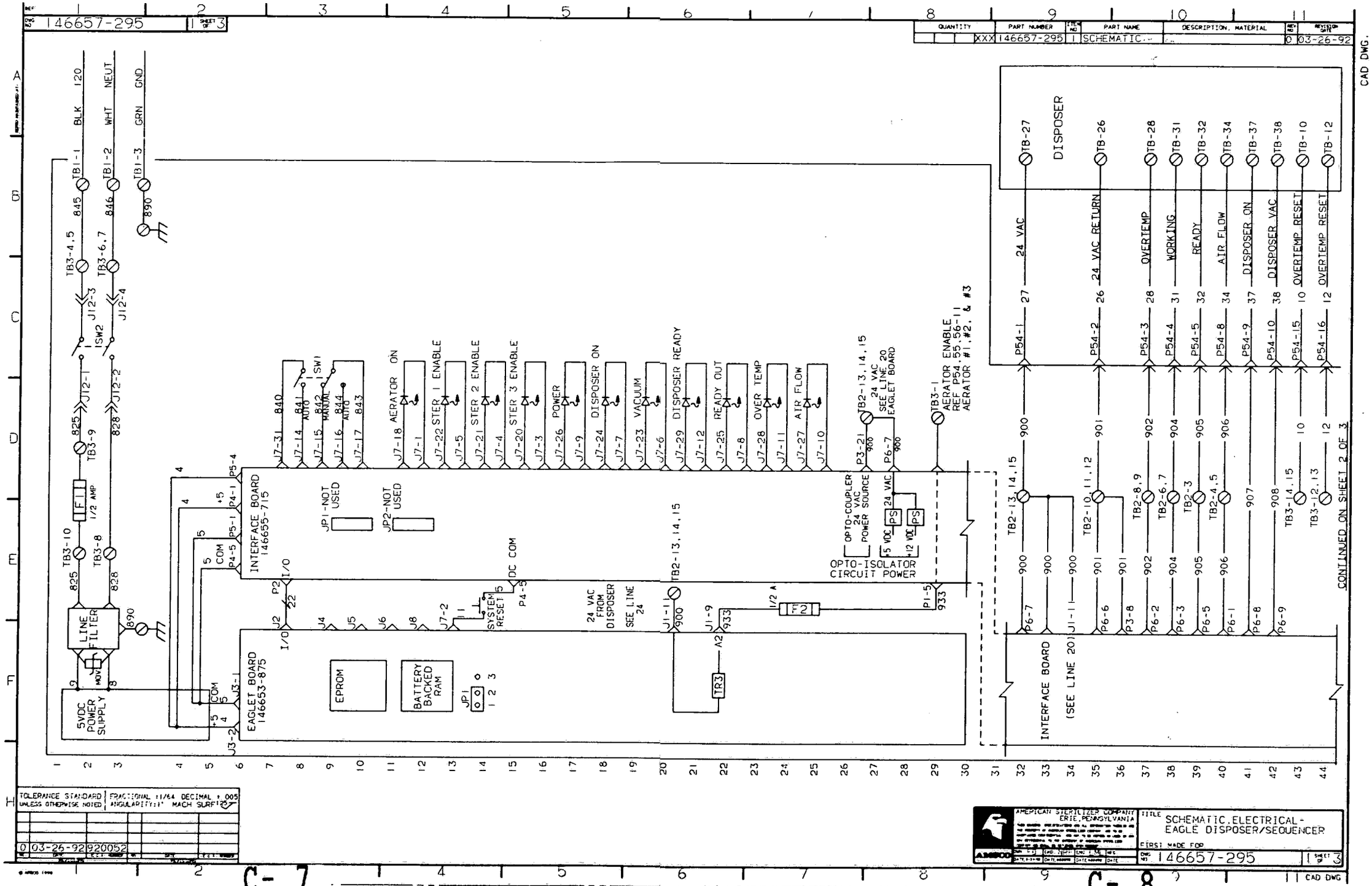
146657-295
SHEET 3 OF 3
QUANTITY | PART NUMBER | ITEM NO | PART NAME | DESCRIPTION, MATERIAL | REV NO | REVISION DATE
XXX | 146657-295 | 1 | SCHEMATIC | 0 | 03-26-92
CAD DWG.
BLK 120
WHT NEUT
GRN GND
TB1-1
TB1-2
TB1-3
845
846
890
TB3-4,5
TB3-6,7
J12-3
J12-4
SW2
J12-1
J12-2
825
828
TB3-9
F1
1/2 AMP
TB3-10
TB3-8
LINE FILTER
MOV
5VDC POWER SUPPLY
INTERFACE BOARD 146655-715
EAGLET BOARD 146653-875
EPROM
BATTERY BACKED RAM
JP1
JP1-NOT USED
JP2-NOT USED
SW1
AUTO
MANUAL
AERATOR ON
STER 1 ENABLE
STER 2 ENABLE
STER 3 ENABLE
POWER
DISPOSER ON
VACUUM
DISPOSER READY
READY OUT
OVER TEMP
AIR FLOW
SYSTEM RESET
24 VAC FROM DISPOSER
SEE LINE 24
DC COM
OPTO-COUPLER 24 VAC POWER SOURCE
OPTO-ISOLATOR CIRCUIT POWER
TB2-13,14,15
24 VAC SEE LINE 20 EAGLET BOARD
TB3-1 AERATOR ENABLE REF P54,55,56-11 AERATOR #1,#2, & #3
TR2
TR3
DISPOSER
TB-27
TB-26
TB-28
TB-31
TB-32
TB-34
TB-37
TB-38
TB-10
TB-12
24 VAC
24 VAC RETURN
OVERTEMP
WORKING
READY
AIR FLOW
DISPOSER ON
DISPOSER VAC
OVERTEMP RESET
OVERTEMP RESET
INTERFACE BOARD (SEE LINE 20)
CONTINUED ON SHEET 2 OF 3
TOLERANCE STANDARD UNLESS OTHERWISE NOTED
FRACTIONAL ±1/64 DECIMAL ±.005
ANGULARITY ±1° MACH SURF 125
0 03-26-92 920052
AMERICAN STERILIZER COMPANY ERIE, PENNSYLVANIA
TITLE SCHEMATIC, ELECTRICAL - EAGLE DISPOSER/SEQUENCER
FIRST MADE FOR
146657-295
SHEET 3
CAD DWG
C-7
C-8

CONTINUED FROM SHT 1 OF 3

INTERFACE BOARD

Line	From	Wire	To	Pin	Signal	Device
46	TB2-13,14,15 (SEE LINES 32,58,70,108,121)	900	P54-26	27	24 VAC	I/F BOARD 146657-275 P6-7
47	TB2-10,11,12 (SEE LINES 35,59,71,90,85,95,109,122)	901	P54-27	26	24 VAC RETURN	P6-6
48	TB2-8,9 (SEE LINES 37,61,110,123)	902	P54-30	28	OVERTEMP	P6-2
49	TB2-6,7 (SEE LINES 38,61,73,112,125)	904	P54-32	31	WORKING	P6-3
50	P3-3	880	P54-20	32	READY	P6-5
51	TB2-4,5 (SEE LINES 40,63,75,114,127)	906	P54-31	34	AIR FLOW	P6-1
52	P3-15	837	P54-17	37	DISPOSER ON	P6-8
53	P3-18	832	P54-14	38	DISPOSER VAC	P6-9
54	TB3-14,15 (SEE LINES 43,66,78,103,115)	10	P54-21	10	OVERTEMP RESET	
55	TB3-12,13 (SEE LINES 44,67,79,104,117)	12	P54-22	12	OVERTEMP RESET	

STERILIZER #1 INTERFACE BOX (3000 SERIES)

Line	From	Wire	To	Pin	Signal	Device
58	TB2-13,14,15 (SEE LINES 32,46,70,108,121)	900	P55-26	27	24 VAC	I/F BOARD 146657-255 & 146657-256 P6-7
59	TB2-10,11,12 (SEE LINES 35,47,71,90,85,95,109,122)	901	P55-27	26	24 VAC RETURN	P6-6
60	TB2-8,9 (SEE LINES 37,48,110,123)	902	P55-30	28	OVERTEMP	P6-2
61	TB2-6,7 (SEE LINES 38,49,73,101,112,125)	904	P55-32	31	WORKING	P6-3
62	P3-2	880	P55-21	32	READY	P6-5
63	TB2-4,5 (SEE LINES 40,51,75,114,127)	906	P55-31	34	AIR FLOW	P6-1
64	P3-14	835	P55-18	37	DISPOSER ON	P6-8
65	P3-19	801	P55-15	38	DISPOSER VAC	P6-9
66	TB3-14,15 (SEE LINES 43,54,78,103,116)	10	P55-20	10	OVERTEMP RESET	
67	TB3-12,13 (SEE LINES 44,55,79,104,117)	12	P55-22	12	OVERTEMP RESET	

STERILIZER #2 INTERFACE BOX (2000 SERIES)

Line	From	Wire	To	Pin	Signal	Device
70	TB2-13,14,15 (SEE LINES 32,46,53,105,121)	900	P56-26	27	24 VAC	P54-14
71	TB2-10,11,12 (SEE LINES 35,47,59,90,85,95,109,122)	901	P56-27	26	24 VAC RETURN	P54-15
72	TB2-8,9 (SEE LINES 37,48,60,110,123)	902	P56-30	28	OVERTEMP	P54-11
73	TB2-6,7 (SEE LINES 38,49,61,101,112,125)	904	P56-32	31	WORKING	P54-10
74	P3-1	882	P56-22	32	READY	P54-9
75	TB2-4,5 (SEE LINES 40,51,63,114,127)	906	P56-31	34	AIR FLOW	P54-7
76	P3-13	834	P56-19	37	DISPOSER ON	P54-18
77	P3-20	823	P56-16	38	DISPOSER VAC	P54-17
78	TB3-14,15 (SEE LINES 43,54,66,103,116)	10	P56-20	10	OVERTEMP RESET	P54-20
79	TB3-12,13 (SEE LINES 44,55,67,103,117)	12	P56-21	12	OVERTEMP RESET	P54-21

STERILIZER #3 INTERFACE BOX (MEDALLION SERIES)

Line	From	Wire	To	Pin	Signal	Device
83	P3-10 803	TB3-1 803	P54-11	7	AERATOR ENABLE	CR4
84	P3-17 833	TB3-3 833	P54-12	12A	AERATOR IN CYCLE	CR3
85	SEE LINES 35,47,59,71,85,90,95,109,122	TB2-10,11,12 901	P54-28	5	24 VAC RETURN	

AERATOR #1

Line	From	Wire	To	Pin	Signal	Device
88	(SEE LINES 83,93)	TB3-1 803	P55-11	7	AERATOR ENABLE	CR4
89	(SEE LINES 84,94)	TB3-3 833	P55-12	12A	AERATOR IN CYCLE	CR3
90	SEE LINES 35,47,59,71,85,90,95,109,122	TB2-10,11,12 901	P55-28	5	24 VAC RETURN	

AERATOR #2

Line	From	Wire	To	Pin	Signal	Device
93	(SEE LINES 83,88)	TB3-1 803	P56-11	7		CR4
94	(SEE LINES 84,89)	TB3-3 833	P56-12	12A		CR3
95	SEE LINES 35,47,59,71,85,90,95,109,122	TB2-10,11,12 901	P56-28	5		

AERATOR #3

CONTINUED ON SHT 3 OF 3

TITLE: SCHEMATIC, ELECTRICAL - EAGLE DISPOSER/ACCUMULATOR

146657-295

SCHEMATIC

03-26-92

C-9

C-10

CAD DWG.

DWG NO 146657-295 | 3 SHEET OF 3

QUANTITY	PART NUMBER	ITEM NO	PART NAME	DESCRIPTION, MATERIAL	REV NO	REVISION DATE
XXX	146657-295	1	SCHEMATIC		0	03-26-92

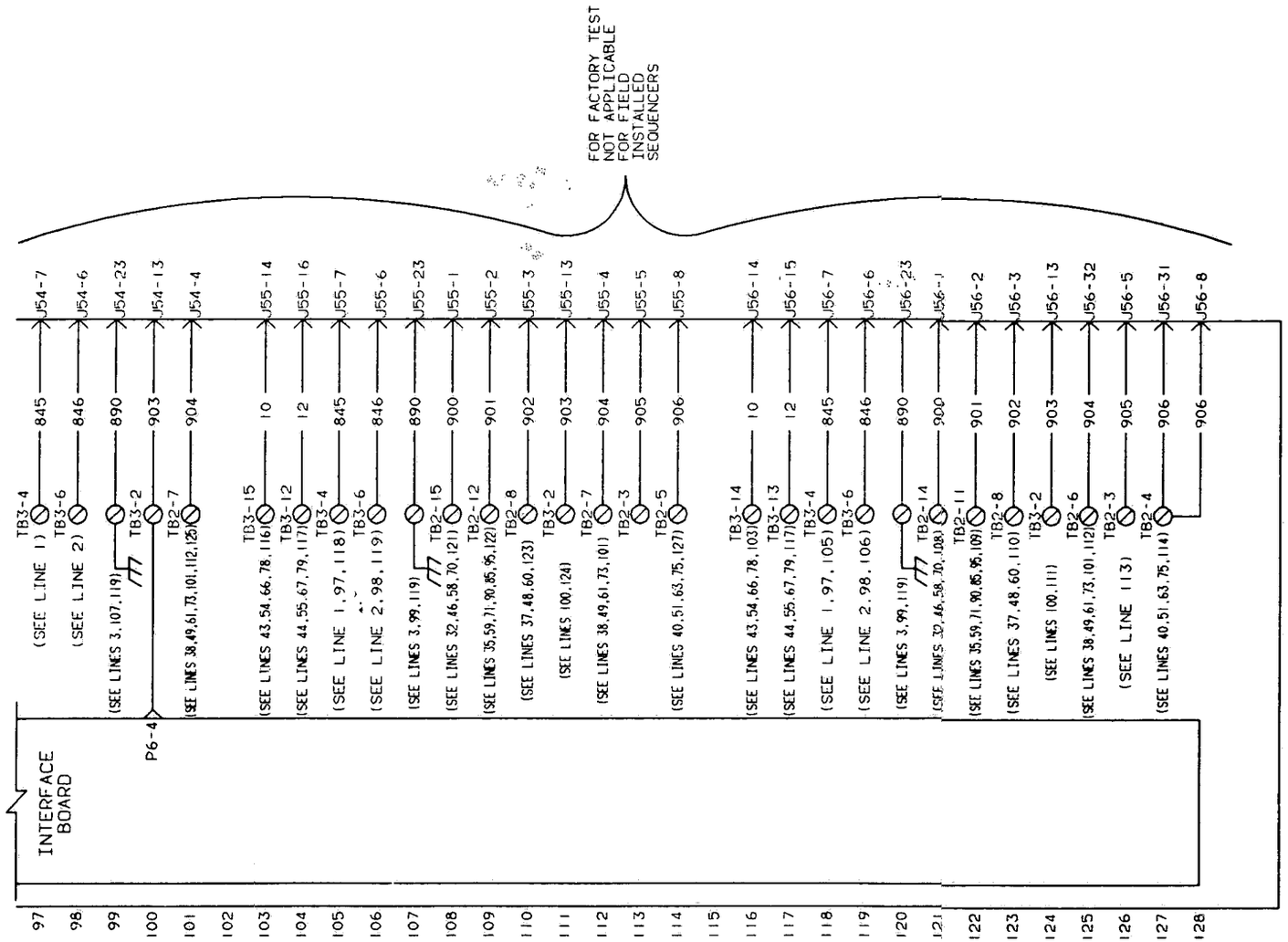

TOLERANCE STANDARD UNLESS OTHERWISE NOTED | FRACTIONAL ±1/64 DECIMAL ± .005 ANGULARITY±1° MACH SURF 125

AMSCO AMERICAN STERILIZER COMPANY ERIE, PENNSYLVANIA

TITLE SCHEMATIC, ELECTRICAL - EAGLE DISPOSER/SEQUENCER

FIRST MADE FOR

DWG NO 146657-295 | 3 SHEET OF 3

CAD DWG

DWG. NO.	SHEET OF
136807-669	1 OF 2

QUANTITY	PART NUMBER	ITEM NO.	PART NAME	DESCRIPTION, MATERIAL	REV NO	REVISION DATE
X	136807-669	1	WIRING	SEQUENCER CONTROL	4	11-01-91

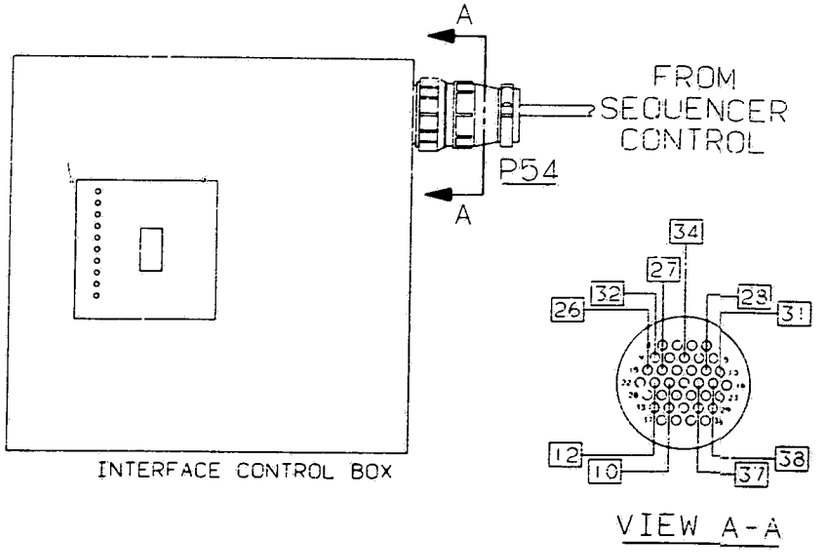

MEDALLION STERILIZER

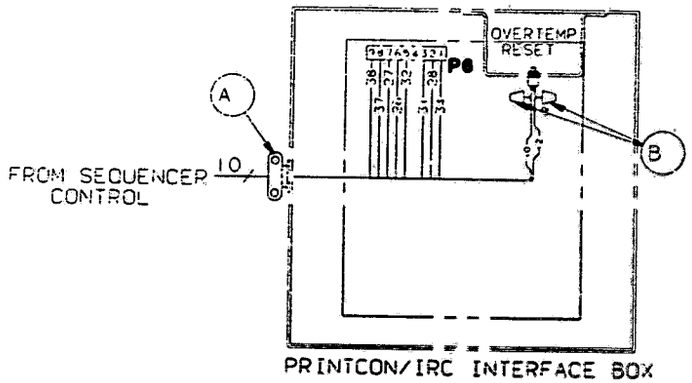

PRINTCON. EAGLE. IRC
OR EAGLE 3000 STERILIZER

SEQUENCER CONNECTIONS TO STERILIZER

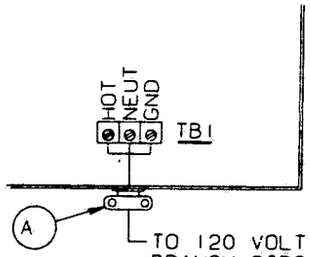

TO 120 VOLT AC SINGLE PHASE 15 AMP BRANCH CIRCUIT; PROVIDE SERVICE DISCONNECT AT SEQUENCER LOCATION

ACTUAL SEQUENCER POWER CONSUMPTION≅15 WATTS

POWER INPUT CONNECTIONS TO SEQUENCER CONTROL

REFERENCE SEQUENCER KIT. P/N 129361-130
A - CORD CLAMP
B - WIRE NUT

NOTES:

1. WHEN A SEQUENCER CONTROL ASSEMBLY IS PART OF THE INSTALLATION, THE STERILIZER (S) (AND AERATOR(S), IF APPLICABLE) DO NOT CONNECT DIRECTLY TO THE DISPOSER IN THIS CASE. THE STERILIZERS CONNECT TO THE SEQUENCER ASSEMBLY, AND THE SEQUENCER ASSEMBLY CONNECTS TO THE DISPOSER.
2. 24 VAC CONTROL CIRCUITRY IS UTILIZED ON ALL INTERCONNECTING WIRING. MULTICONDUCTOR 22 OR 24 AWG STRANDED CABLE IS RECOMMENDED. OBTAIN 10 CONDUCTOR CABLE FOR THE CONNECTION FROM THE DISPOSER TO THE SEQUENCER, 10 CONDUCTOR FOR CONNECTION FROM THE STERILIZERS TO THE SEQUENCER, AND 4 CONDUCTOR FOR THE CONNECTION OF AERATOR(S) TO THE SEQUENCER.
3. THE SEQUENCER BOX IS NORMALLY MOUNTED IN THE ACCESS AREA OF THE STERILIZERS TO AID IN SERVICING. WALL-MOUNTED IN THE ACCESS AREA IS ACCEPTABLE.
4. BEFORE WIRING THE STERILIZERS TO THE SEQUENCER BOX, THEY MUST BE IDENTIFIED #1, #2, #3 AS DESIRED IN ORDER TO BE PROPERLY WIRED TO THE SEQUENCER ASSEMBLY.

TOLERANCE STANDARD UNLESS OTHERWISE NOTED | FRACTIONAL ±1/64 DECIMAL ±.005 ANGULARITY±1° MACH. SURF 125

NO	DATE	ECN NUMBER	NO	DATE	ECN NUMBER
3	09-04-90	RA#163			
2	07-17-90	RA#149			
1	09-06-89	RA #52	4	11-01-91	910211
0	6-20-89	PER 25	3	09-04-90	900200

REVISIONS

© AMSCO 1989

AMERICAN STERILIZER COMPANY
ERIE, PENNSYLVANIA

TITLE WIRING CONNECTIONS SEQUENCER CONTROL

FIRST MADE FOR:

DWG. NO. 136807-669 SHEET 1 OF 2

DWG. NO. 136807-669 | SHEET 2 OF 2

QUANTITY	PART NUMBER	ITEM NO.	PART NAME	DESCRIPTION, MATERIAL	REV NO	REVISION DATE
X	136807-669	1	WIRING	SEQUENCER CONTROL	4	11-01-91

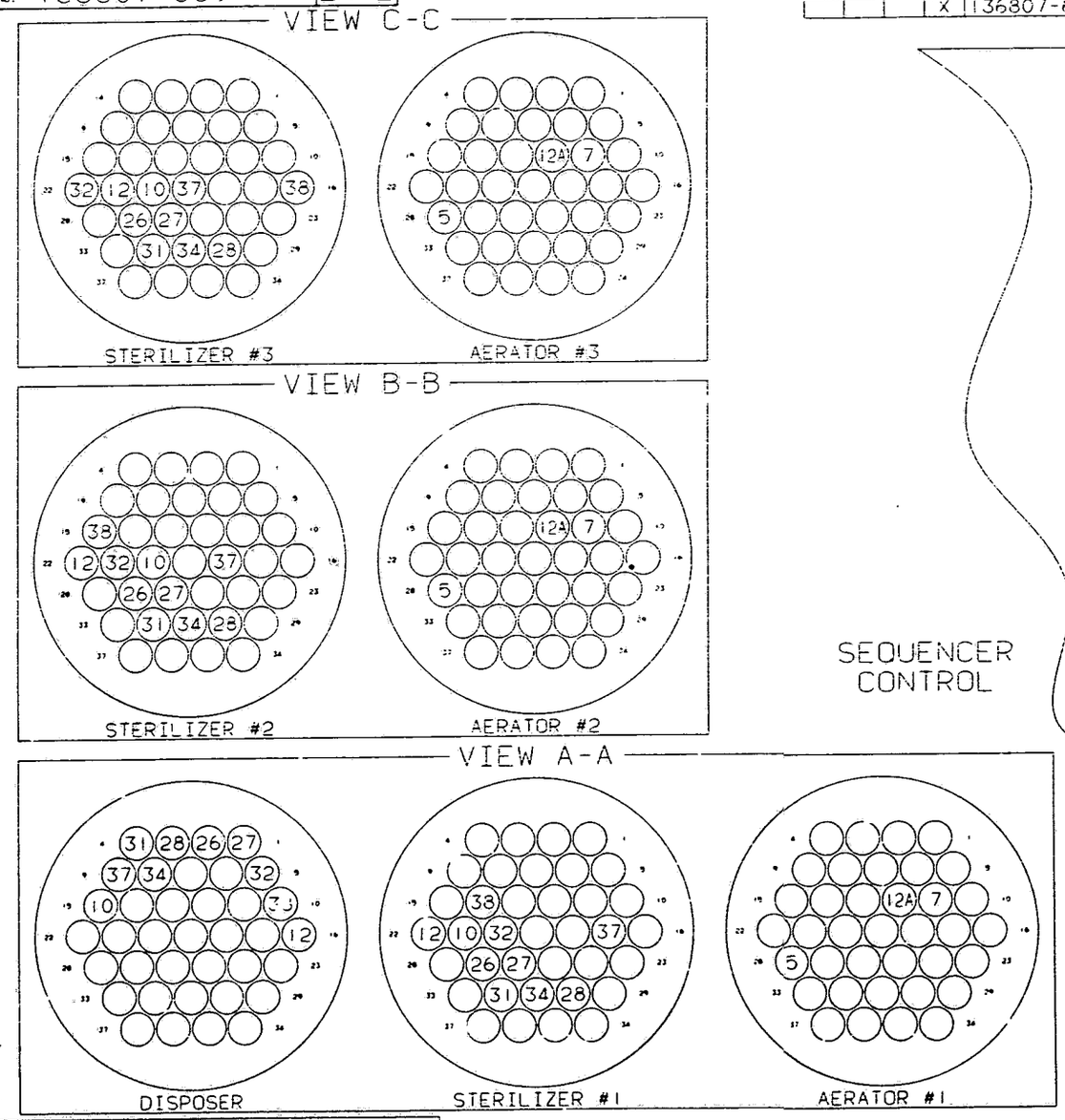

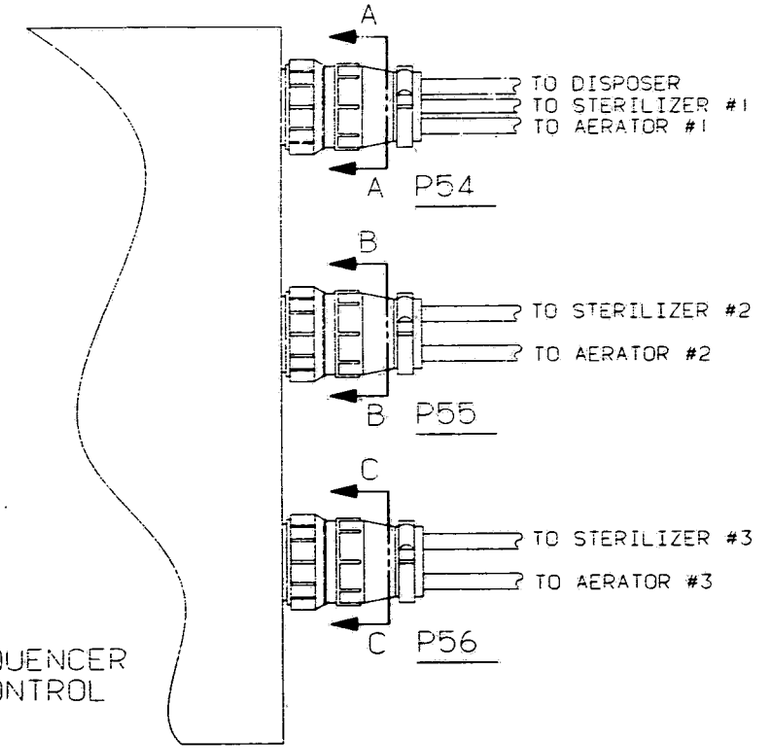

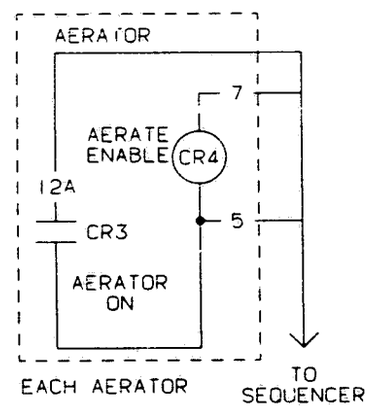

TOLERANCE STANDARD UNLESS OTHERWISE NOTED | FRACTIONAL ±1/64 DECIMAL ±.005 ANGULARITY±1° MACH. SURF 125

NO	DATE	E.C.A. NUMBER	NO	DATE	E.C.A. NUMBER
	REVISIONS			REVISIONS	

AMERICAN STERILIZER COMPANY
ERIE, PENNSYLVANIA

THIS DRAWING, SPECIFICATIONS AND ALL INFORMATION THEREON ARE THE PROPERTY OF AMERICAN STERILIZER COMPANY AND TO BE MAINTAINED CONFIDENTIAL AND NOT TO BE COPIED OR USED IN ANY MANNER DETRIMENTAL TO THE INTEREST OF AMERICAN STERILIZER COMPANY AND SHALL BE RETURNED UPON REQUEST

AMSCO

DWN	CHKD	ENG	MFG
JMT-C	JMT-C	LML	
DATE 6-16-89	DATE 6-20-89	DATE 6-20-89	DATE

TITLE: WIRING CONNECTIONS SEQUENCER CONTROL

FIRST MADE FOR:

DWG. NO. 136807-669 | SHEET 2 OF 2

© AMSCO 1989

CAD DWG.

D-1 D-2

146655-107 | 1 OF 2

WIRE #	ITEM & COLOR	LENGTH	FROM	CONN METH	TO	CONN METH
BLK LEAD			AIR FLOW LED	---	P7-10	A
RED LEAD			AIR FLOW LED	---	P7-27	A
BLK LEAD			DISP. ON LED	---	P7-7	A
RED LEAD			DISP. ON LED	---	P7-24	A
BLK LEAD			DISP. READY LED	---	P7-12	A
RED LEAD			DISP. READY LED	---	P7-29	A
BLK LEAD			OVER TEMP LED	---	P7-11	A
RED LEAD			OVER TEMP LED	---	P7-28	A
BLK LEAD			POWER LED	---	P7-9	A
RED LEAD			POWER LED	---	P7-26	A
BLK LEAD			READY OUT LED	---	P7-8	A
RED LEAD			READY OUT LED	---	P7-25	A
BLK LEAD			VACUUM LED	---	P7-6	A
RED LEAD			VACUUM LED	---	P7-23	A
BLK LEAD			STEP.1 ENABLE LED	---	P7-1	A
RED LEAD			STEP.1 ENABLE LED	---	P7-18	A
BLK LEAD			STEP.2 ENABLE LED	---	P7-2	A
RED LEAD			STEP.2 ENABLE LED	---	P7-19	A
BLK LEAD			STEP.3 ENABLE LED	---	P7-5	A
RED LEAD			STEP.3 ENABLE LED	---	P7-22	A
BLK LEAD			AERATE ON LED	---	P7-3	A
RED LEAD			AERATE ON LED	---	P7-20	A
4	IT.32 RED	15"	PS +OUT	D	J3-2	F
4	IT.30 RED	22"	PS +OUT	D	P4-1	E
4	IT.30 RED	4"	P5-4	E	P4-1	E
5	IT.33 BLK	15"	PS -OUT	D	J3-1	F
5	IT.31 BLK	22"	PS -OUT	D	P4-5	E
5	IT.35 BLK		PUSH-BUTTON	D	P4-5	E
8	IT.35 BLK	15"	LOAD 1	C	P5-1	D
9	IT.34 WHT	15"	LOAD 2	C	P5-4	D
11	IT.35 BLK		PUSH-BUTTON	D	P7-2	F
801	IT.31 BLK	8"	TB2-10	B	P3-19	E
801	IT.31 BLK	14"	P54-15	J	TB2-10	B
803	IT.31 BLK	8"	TB2-7	B	P3-10	E
803	IT.31 BLK	14"	P54-11	J	TB2-7	B
823	IT.31 BLK	9"	TB2-9	B	P3-20	E
823	IT.31 BLK	12"	P54-16	J	TB2-9	B
825	IT.35 BLK	6"	TB3-1	B	F1-A	C
825	IT.35 BLK	14"	F1-B	C	LINE 1	C
825	IT.35 BLK	10"	SW2-2	C	P12-1	H
825	IT.35 BLK	10"	J12-1	I	TB3-1	B
828	IT.34 WHT	8"	TB3-2	B	LINE 2	C
828	IT.34 WHT	10"	SW2-5	B	P12-2	H
828	IT.34 WHT	10"	J12-2	I	TB3-2	C
828	IT.36 WHT	18"	TB1-3	B	P1-1	E
832	IT.31 BLK	8"	TB2-11	B	P3-18	E
832	IT.31 BLK	12"	P54-14	J	TB2-11	B
833	IT.31 BLK	8"	TB2-12	B	P3-17	E
833	IT.31 BLK	12"	P54-12	J	TB2-12	B
834	IT.31 BLK	8"	TB2-13	B	P3-13	E
834	IT.31 BLK	12"	P54-19	J	TB2-13	B
835	IT.31 BLK	8"	TB2-14	B	P3-14	E
835	IT.31 BLK	12"	P54-18	J	TB2-14	B
837	IT.31 BLK	8"	TB2-15	B	P3-15	E
837	IT.31 BLK	12"	P54-17	J	TB2-15	B
840	IT.31 BLK	12"	P7-31	A	SW1-2	C
841	IT.31 BLK	12"	P7-14	A	SW1-3	C
842	IT.31 BLK	12"	P7-15	A	SW1-4	C
843	IT.31 BLK	12"	P7-17	A	SW1-5	C
844	IT.31 BLK	12"	P7-16	A	SW1-6	C
845	IT.35 BLK	10"	TB1-1	B	J12-3	I
845	IT.35 BLK	10"	P12-3	H	SW2-1	C
845	IT.35 BLK	16"	P54-6	J	TB1-1	B
846	IT.34 WHT	10"	TB1-2	B	J12-4	I
846	IT.34 WHT	10"	P12-4	H	SW2-4	C
846	IT.34 WHT	16"	P54-7	J	TB1-2	B
850	IT.31 BLK	8"	TB2-5	B	P3-9	E
880	IT.31 BLK	8"	TB2-2	B	P3-3	E
880	IT.31 BLK	16"	P54-20	J	TB2-2	B
881	IT.31 BLK	8"	TB2-6	B	P3-2	E
881	IT.31 BLK	14"	P54-21	J	TB2-6	B

WIRE #	ITEM & COLOR	LENGTH	FROM	CONN METH	TO	CONN METH
882	IT.31 BLK	8	TB2-8	B	P3 [illegible]	E
882	IT.31 BLK	14"	P54-22	J	[illegible]	B
883	IT.31 BLK	14"	[illegible]	[illegible]	[illegible]	[illegible]
885	IT.31 BLK	12"	[illegible]	B	P3-[illegible]	[illegible]
890	IT.37 GRN	16	P54-[illegible]	J	[illegible]	[illegible]
900	IT.31 BLK	12"	[illegible]	[illegible]	[illegible]	[illegible]
900	IT.31 BLK	[illegible]	[illegible]	B	[illegible]	[illegible]
900	IT.33 BLK	12	[illegible]	B	[illegible]	[illegible]
900	IT.31 BLK	[illegible]	[illegible]	B	[illegible]	[illegible]
900	IT.31 BLK	12	[illegible]	J	[illegible]	[illegible]
901	IT.31 BLK	12	[illegible]	[illegible]	[illegible]	[illegible]
901	IT.31 BLK	[illegible]	[illegible]	B	[illegible]	[illegible]
901	IT.31 BLK	[illegible]	[illegible]	B	[illegible]	[illegible]
901	IT.31 BLK	4	[illegible]	[illegible]	[illegible]	[illegible]
902	IT.31 BLK	12	[illegible]	E	[illegible]	[illegible]
902	IT.31 BLK	12	[illegible]	[illegible]	[illegible]	[illegible]
903	IT.31 BLK	12	[illegible]	E	[illegible]	[illegible]
903	IT.31 BLK	12	P54-[illegible]	J	[illegible]	[illegible]
904	IT.31 BLK	12	P6-3	E	[illegible]	[illegible]
904	IT.31 BLK	12	P54-[illegible]	J	[illegible]	[illegible]
905	IT.31 BLK	12	[illegible]	E	[illegible]	[illegible]
905	IT.31 BLK	14	P54-[illegible]	J	[illegible]	[illegible]
906	IT.31 BLK	12	[illegible]	[illegible]	[illegible]	[illegible]
906	IT.31 BLK	14	P54-[illegible]	J	[illegible]	[illegible]
907	IT.31 BLK	[illegible]	P6-[illegible]	E	[illegible]	[illegible]
907	IT.31 BLK	[illegible]	P54-[illegible]	J	[illegible]	[illegible]
908	IT.31 BLK	12	P6-[illegible]	E	[illegible]	[illegible]
908	IT.31 BLK	4	P54-[illegible]	J	[illegible]	[illegible]
933	IT.33 BLK	9"	[illegible]	C	[illegible]	C
933	IT.31 BLK	12	[illegible]	C	P5	E
GROUND	IT.37 GRN	12	[illegible]	B	[illegible]	[illegible]
JUMPER	IT.35 BLK	2	PS-[illegible]	[illegible]	PS [illegible]	[illegible]
JUMPER	IT.35 BLK	2"	PS-3	[illegible]	[illegible]	[illegible]

NOTES:

1. WIRE #22 GA STRANDED COPPER, 19/34 STRANDING, TEFLON INSULATION, U.L. STYLE [illegible], 300 [illegible] AND [illegible] APPLIANCE WIRE, .010 THK INSULATION, [illegible] LABELS REQ'D.
2. WIRE #22 GA STRANDED COPPER, 7/30 STRANDING, [illegible] PVC INSULATION.
3. WIRE 18 GA STRANDED COPPER, 16/30 STRANDING, [illegible] THERMOPLASTIC INSULATION.
4. CONNECTION METHOD "A". ITEM #38. STRIP [illegible]
   CONNECTION METHOD "B". ITEM #39. STRIP [illegible]
   CONNECTION METHOD "C". ITEM #40. STRIP [illegible]
   CONNECTION METHOD "D". SOLDER-STRIP 1/4" AND TIN SEE NOTE #[illegible]
   CONNECTION METHOD "E". STRIP 5/16" AND TIN
   CONNECTION METHOD "F". NO STRIP
   CONNECTION METHOD "G". ITEM #41. STRIP [illegible]
   CONNECTION METHOD "H". ITEM #56. STRIP 3/16
   CONNECTION METHOD "I". ITEM #57. STRIP 3/16
   CONNECTION METHOD "J". ITEM #68. STRIP 3/16"
5. CAREFULLY APPLY COVER LABEL, ITEM 22, BEFORE WIRING SWITCHES, ITEM #13 AND 14, AND LED LIGHTS, ITEM #12
6. BLACK INSULATION SLEEVING, BRAIDED GLASS FIBER/VINYL COVERED NEMA VS-1, GRADE B, SIZE 14 (.064/.072 ID)
7. ALL SOLL / MATERIAL SHALL BE IN ACCORDANCE WITH AMSCO DWG. 52595.
8. LABEL COMPONENTS AS SHOWN WITH BRADY TYPE MARKERS. BLACK LETTERS ON YELLOW BACKGROUND.
9. LABEL WIRES 4" LONG OR LESS ONCE IN CENTER. LABEL LONGER WIRES 1" FROM EACH END USING BRADY TYPE MARKERS. BLACK LETTERS ON WHITE BACKGROUND.
10. PLACE TIE WRAPS, ITEM #44, WHERE NECESSARY TO MAINTAIN A NEAT ASSEMBLY.
11. SCRAPE PAINT FROM SURFACE AROUND RIGHT MOUNTING HOLE OF BOX MODIFICATION, ITEM #2, BEFORE FASTENING GROUND ITEMS #41, 47, & 48.
12. DO NOT TIE WRAP WIRES #4 & #5 TO ANY OTHER WIRING. TIE WRAP THEM TOGETHER AND USE HARNESS MOUNTS, ITEM 43, TO SECURE TO BOX.
13. TIE WRAP WIRE 900 THRU 908 AS A GROUP BETWEEN TB1 AND P6.
14. TWIST WIRES 5 & 11 FROM RESET BUTTON TO EAGLET BOARD/PLUG P4.
15. TWIST WIRES 4 & 5 FROM POWER SUPPLY TO EAGLET BOARD/PLUG P3.
16. TWIST WIRES 4 & 5 FROM POWER SUPPLY TO EAGLET BOARD/PLUG P4.
17. DRESS AND SECURE WIRING AWAY FROM FUSES. WIRING MUST NOT ABSCURE FUSE ACCESS.
18. SHUNTS FOR JUMPERS JP1 & JP2 ON INTERFACE BOARD, ITEM 6, MAY BE IN EITHER POSITION
19. SHUNT FOR JUMPER JP1 ON EAGLET BOARD, ITEM 7, MUST BE IN "WDOG" POSITION.

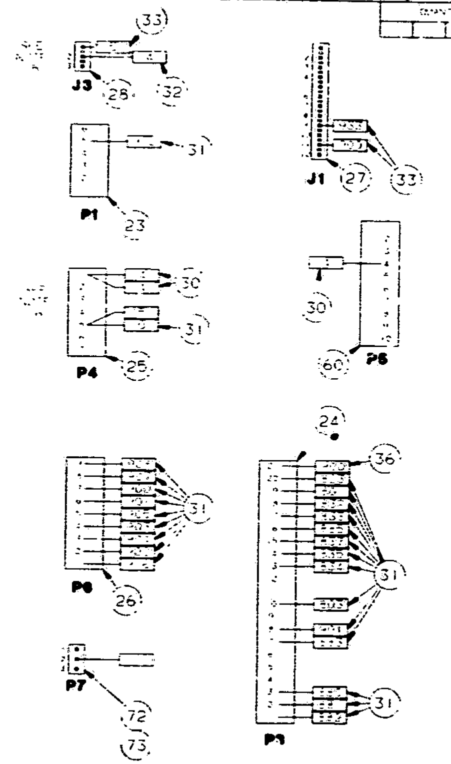

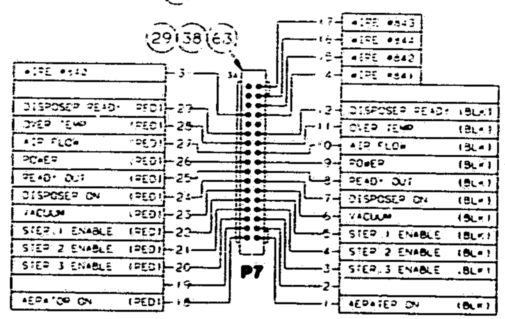

LABEL ITEM 63 "P7" WITH INDELIBLE BLACK

VIEW E-E
SCALE 1.5:1

QTY	PART NUMBER	ITEM NO.	PART NAME	DESCRIPTION, MATERIAL
X	146655-107	1	INTERFACE BOX	SEQUENCER
1	146655-110	2	BOX MODIFICATION	
1	93910-110	3	BRACKET, MOUNTING	
1	93821-001	4	LINE FILTER	
1	93909-994	5	POWER SUPPLY	5V
1	146655-715	6	PC BOARD ASS'Y	DISPOSER INTERFACE
1	146653-875	7	PC BOARD ASS'Y	EAGLET II
2	93902-847	8	TERMINAL BOARD	15 POS. TB1, TB2
1	93902-900	9	TERMINAL BOARD	7 POS. TB3
2	150822-678	10	FUSEBLOCK	SINGLE F1,F2
2	20341-091	11	FUSE	0.5A 250V. F1,F2
11	129361-013	12	LED, SNAP-IN	
1	93909-993	13	SWITCH, ROCKER	AUTO/MAN SW1
1	93902-846	14	SWITCH, ROCKER	POWER/OFF SW2
1	150778-001	15	VARISTOR	
1		16	VINYL INSUL TUBE	1/16 [illegible] 1/4 LG. SEE NOTE #6
2	84123-001	17	BAR, JUMPER	
4	150475-928	18	STAND-OFF	#6-32 X 7/8 LG.
4	129361-680	19	STAND-OFF, M/F	#6-32 X 7/16" LG.
4	129361-082	20	STAND-OFF M/F	#6-32 X 1 3/4 LG.
1	93910-097	21	CABLE ASS'Y.	J3/P2
1	93910-113	22	LABEL	LED/SWITCH ID SEE NOTE #5
1	129361-019	23	PLUG, 6 POS.	P1
1	129361-023	24	PLUG, 21 POS.	P3
1	129361-020	25	PLUG, 7 POS.	P4
1	129361-021	26	PLUG, 9 POS.	P6
1	129361-086	27	PLUG, 12 POS.	J1
1	129361-085	28	PLUG, 3 POS.	J3
1	56396-486	29	PLUG, 34 POS.	P7
1		30	WIRE, RED	2'2" LG. SEE NOTE #1
1		31	WIRE, BLACK	32'5" LG. SEE NOTE #1
1		32	WIRE, RED	1'3" LG. SEE NOTE #2
1		33	WIRE, BLACK	2'11" LG. SEE NOTE #2
1		34	WIRE, WHITE	5'1" LG. SEE NOTE #3
1		35	WIRE, BLACK	6'5" LG. SEE NOTE #3
1		36	WIRE, WHITE	1'6" LG. SEE NOTE #1
1		37	WIRE, GREEN	1'2" LG. SEE NOTE #3
28	150822-810	38	CONTACT, SOCKET	.025 SQ POST 24/20 AWG
56	129359-024	39	REC., FAST-ON	.020 X .187 TAB 22/18 AWG
10	150476-410	40	REC., FAST-ON	.032 X .250 TAB 22/18 AWG
1	14865-091	41	TERMINAL, RING	#8 STUD 22/16 AWG SEE NOTE #[illegible]
2	32118-091	42	ADAPTER, QK DISC	
10	129326-001	43	HARNESS MOUNT	
12	84104-001	44	TIE WRAP	SEE NOTE #10
22	93908-039	45	SCREW, SEMS	#6-32 X 3/8" LG
2	93908-033	46	SCREW, SEMS	#6-32 X 1/4" LG
6	93908-037	47	SCREW, SEMS	#8-32 X 1/2" LG
5	129359-531	48	NUT, KEPS	#8-32
4	93908-036	49	SCREW, SEMS	#10-32 X 3/8" LG
4	129359-532	50	NUT, KEPS	#10-32
2	129266-001	51	TUBING, HYSHRINK	
5	78629-091	52	TUBING, HYSHRINK	
2	92615-001	53	LABEL	1/2 AMP F1,F2
1	129115-001	54	HOUSING, PLUG	
1	129118-001	55	HOUSING, CAP	
4	129039-001	56	CONTACT, SOCKET	20/14 AWG
4	129113-001	57	CONTACT, PIN	20/14 AWG
3	50527-061	58	SCREW, SOCKET HD	#8-32 X 1/2" LG.
3	17796-091	59	WASHER, FLAT	.203 ID X .438 OD X .031 THK
1	129361-022	60	PLUG, 10 POS	P5
1	93910-117	61	PROGRAMMED EPROM	U4
12	84121-002	62	NUT, KEPS	#6-32
1	150822-003	63	MARKER, TIE	
8	27542-042	64	SCREW, RD. HD	#8-32 X 3/8" LG
8	19676-041	65	LOCKWASHER	#8
1	129359-025	66	LABEL	
1	93443-006	67	RECEPTACLE.	P54
23	129262-004	68	SOCKET, CONTACT	
1	129361-113	69	SWITCH, PUSHBUTTON	
4	129266-001	70	TUBING, HYSHRINK	
1	93910-137	71	SWITCH, BRACKET	
1	129361-109	72	HOUSING, RECEPTACLE	
1	129361-108	73	CONTACT, RECEPTACLE	

REV. 4 04-19-91

CAD DWG.

TOLERANCE STANDARD UNLESS OTHERWISE NOTED | FRACTIONAL ±1/64 DECIMAL ±.005 ANGULARITY ±1° MACH. SURF. 125

REV	DATE	ECN	REV	DATE	ECN
3	07-17-90	PA #152			
2	04-24-90	PA 120			
1	12-13-89	PA #88	4	04-19-91	910084
0	4-25-89	PER #2	3	07-17-90	900200

AMERICAN STERILIZER COMPANY
ERIE, PENNSYLVANIA

AMSCO

TITLE INTERFACE BOX ASS'Y. SEQUENCER

FIRST MADE FOR.

DWG NO. 146655-107 | SHEET 1 OF 2

CAD DWG.

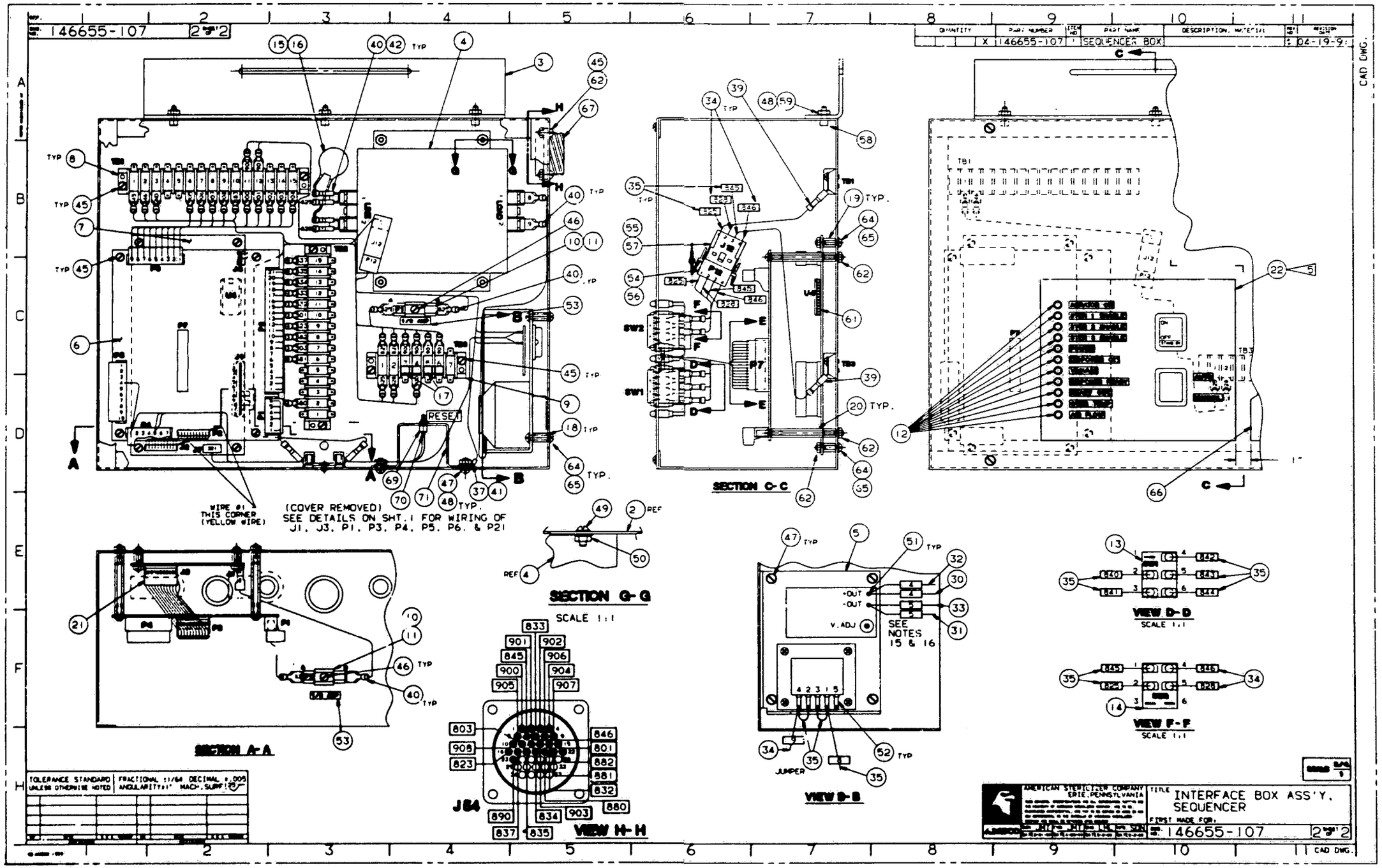
146655-107
2 of 2
QUANTITY
PART NUMBER
ITEM NO
PART NAME
DESCRIPTION, MATERIAL
X
146655-107
SEQUENCER BOX
04-19-9
CAD DWG.
WIRE #1 THIS CORNER (YELLOW WIRE)
(COVER REMOVED) SEE DETAILS ON SHT. 1 FOR WIRING OF J1, J3, P1, P3, P4, P5, P6, & P21
SECTION C-C
SECTION G-G
SCALE 1:1
SECTION A-A
VIEW H-H
J84
VIEW B-B
SEE NOTES 15 & 16
JUMPER
VIEW D-D
SCALE 1:1
VIEW F-F
SCALE 1:1
TOLERANCE STANDARD UNLESS OTHERWISE NOTED
FRACTIONAL ±1/64 DECIMAL ±.005 ANGULARITY ±1° MACH. SURF. 125
AMERICAN STERILIZER COMPANY ERIE, PENNSYLVANIA
TITLE
INTERFACE BOX ASS'Y. SEQUENCER
FIRST MADE FOR:
146655-107
2 of 2
CAD DWG.

D- 5

D- 6

146655-869

146655-715 | 1 OF 3

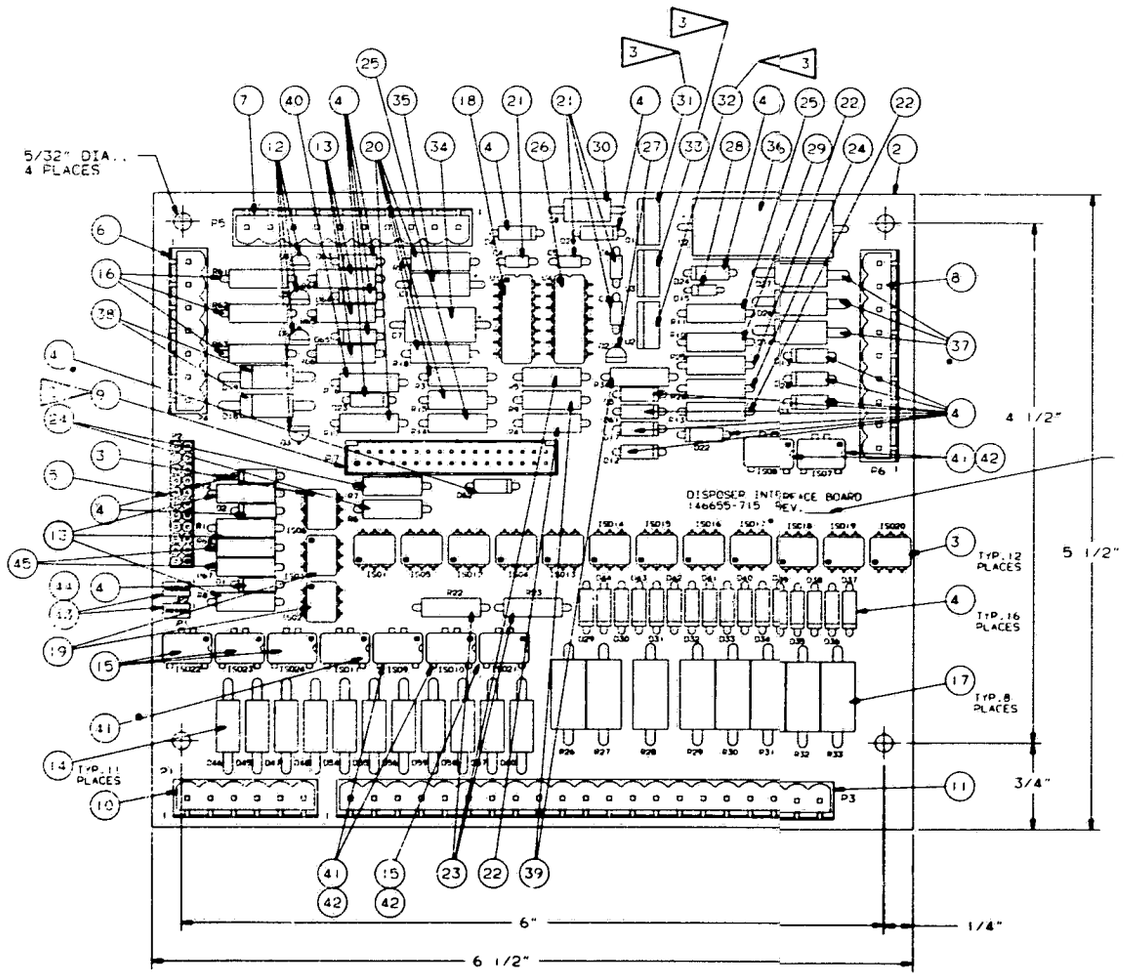

QUANTITY	PART NUMBER	ITEM NO	PART NAME	DESCRIPTION, MATERIAL		REVISION DATE
	146655-715	1	PC BOARD ASS'Y.			10-08-90
1	136807-909	2	BARE BOARD			
13	129360-335	3	OPTO ISOLATOR	IS01,IS04/6,IS012/20		CNY17
35	84157-002	4	RECTIFIER	D1/5,D12,D13,D17,D20,D22/25,D28/44,D61/65		IN4004
1	129361-077	5	HEADER, 22 POS.	P2		
1	129361-015	6	HEADER, 7 POS.	P4		
1	129361-017	7	HEADER, 10 POS.	P5		
1	129361-016	8	HEADER, 9 POS.	P6		
1	34232-005	9	HEADER, 34 POS.	P7		
1	129361-014	10	HEADER, 6 POS.	P1		
1	129361-018	11	HEADER, 21 POS.	P3		
4	129357-534	12	TRANSISTOR	Q3,Q4,Q5,Q6		2N3904
6	93902-409	13	RESISTOR, 1.82K	R1,R8,R12,R64,R65,R66		
11	129361-025	14	DIODE, 220V	D45/48,D54/60		1.5KE220CA
4	129356-090	15	RELAY,PHOTOVOLT.	IS021,IS022,IS023,IS024		PVA2352
3	93902-402	16	RESISTOR, 200Ω	R61,R62,R63		
8	129361-083	17	RESISTOR, 820Ω	R26,R27,R28,R29,R30,R31,R32,R33		
1	129356-050	18	IC, HEX SCHMITT	U1		74LS14
2	129360-378	19	OPTOISOLATOR	IS02,IS03		TIL113
5	93900-302	20	RESISTOR, 10K	R2,R3,R15,R17,R18		
4	150822-822	21	CAPACITOR, 0.1uF	C3,C4,C5,C6		
3	93902-406	22	RESISTOR, 732Ω	R4,R13,R25		
3	93900-305	23	RESISTOR, 681Ω	R5,R22,R23		
3	93900-329	24	RESISTOR, 562Ω	R6,R7,R24		
2	93900-308	25	RESISTOR, 1K	R11,R14		
1	129360-769	26	FLIP-FLOP,DUAL D	U4		74LS74
1	34171-003	27	TRANSISTOR	Q2		2N3905
1	129352-046	28	DIODE,ZENER 28V	D15		1N5255B
1	93900-354	29	RESISTOR, 10Ω	R10		
1	56396-704	30	CAPACITOR,0.33uF	C8		
1	129356-056	31	TRANSISTOR	Q1		TIP120
1	129357-246	32	VOLTAGE REG.	U2		LM7805
1	129352-131	33	VOLTAGE REG.	U3		LM7812
1	93910-077	34	CAPACITOR, 100uF	C7		
1	56396-694	35	CAPACITOR,10uF	C1		
1	93910-076	36	CAPACITOR	C2		
3	129361-076	37	DIODE, 56V	D14,D26,D27		1.5KE56C
2	93910-519	38	TRANSZORB	D18,D19		SA17
2	93900-326	39	RESISTOR, 187Ω	R9,R34		
1	93902-401	40	RESISTOR, 27.4Ω	R16		
5	129360-770	41	DIP SW.CHIP RELAY	IS07,IS08,IS09,IS010,IS011		CS6005
5	129361-696	42	SOCKET,	8 PIN DIP		
2	129360-407	43	HEADER, PIN	3 POSITION JP1, JP2		
2	129357-237	44	SHUNT			
2	129362-411	45	RESISTOR, 619Ω	R67, R68		

NOTES:

1. STAMP LATEST REVISION NUMBER USING WHITE LETTERING.
2. NOTE ORIENTATION OF HEADER 'P7', ITEM #9, BEFORE INSTALLING.
3. TRANSISTOR AND VOLTAGE REGULATORS, ITEMS #31, 32, AND 33 MUST NOT TOUCH.

SETTING FOR JP1, LP2

TOLERANCE STANDARD UNLESS OTHERWISE NOTED	FRACTIONAL ±1/64 ANGULARITY ±1°	DECIMAL ±.005 MACH. SURF.
1 10-08-90	900200	
1 10-08-90	PA#172	
0 07-26-90	PFA#30	

AMERICAN STERILIZER COMPANY ERIE, PENNSYLVANIA

TITLE PC BOARD ASS'Y. DISPOSER INTERFACE

FIRST MADE FOR: 136806-997, 146655-106/107

146655-715 | 1 OF 3

CAD DWG.

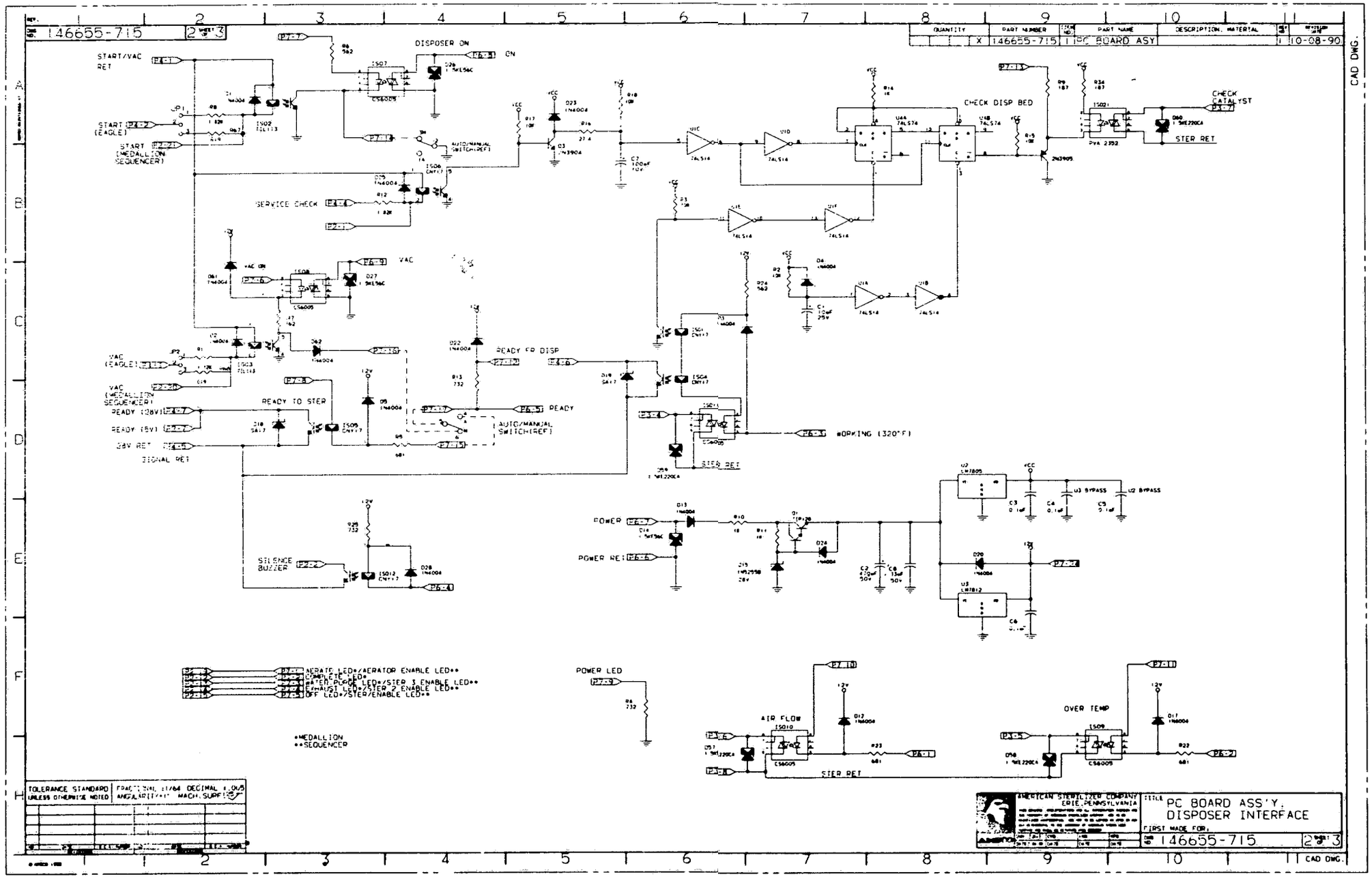
146655-715
QUANTITY
PART NUMBER
PART NAME
DESCRIPTION, MATERIAL
146655-715
PC BOARD ASY
10-08-90
CAD DWG.
START/VAC RET
START (EAGLE)
START (MEDALLION SEQUENCER)
SERVICE CHECK
DISPOSER ON
ON
AUTO/MANUAL SWITCH(REF)
VAC
VAC ON
VAC (EAGLE)
VAC (MEDALLION SEQUENCER)
READY (28V)
READY (5V)
28V RET
SIGNAL RET
READY TO STER
READY FR DISP
READY
SILENCE BUZZER
CHECK DISP BED
CHECK CATALYST
STER RET
#OPNING (320°F)
POWER
POWER RET
U3 BYPASS
U2 BYPASS
POWER LED
AIR FLOW
OVER TEMP
AERATE LED*/AERATOR ENABLE LED**
COMPLETE LED*
WATER/PLUGGE LED*/STER 3 ENABLE LED**
EXHAUST LED*/STER 2 ENABLE LED**
OFF LED*/STER/ENABLE LED**
*MEDALLION
**SEQUENCER
TOLERANCE STANDARD UNLESS OTHERWISE NOTED
AMERICAN STERILIZER COMPANY
ERIE, PENNSYLVANIA
TITLE
PC BOARD ASS'Y.
DISPOSER INTERFACE
FIRST MADE FOR:
146655-715
CAD DWG.

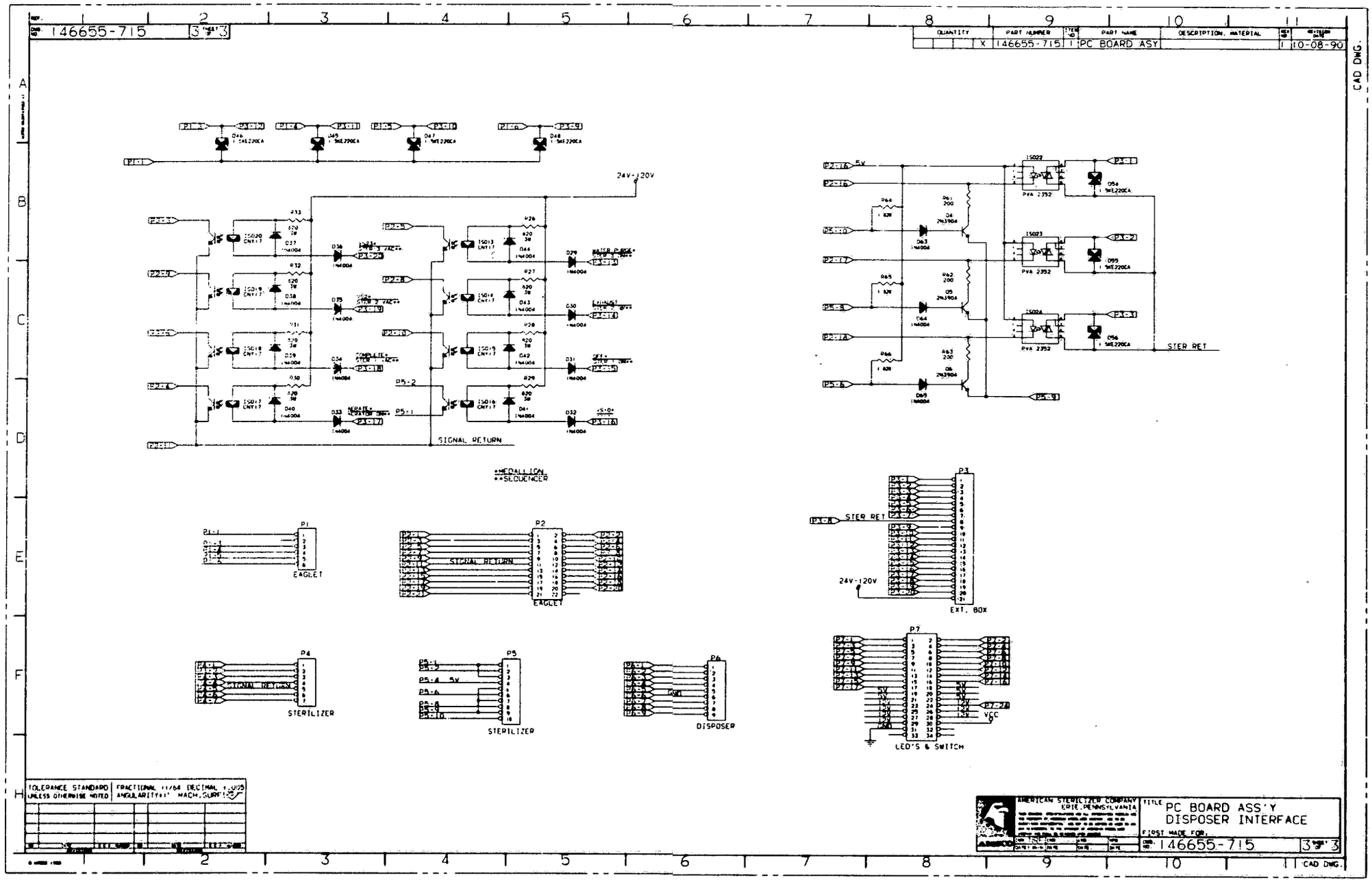
146655-715
QUANTITY
PART NUMBER
PART NAME
DESCRIPTION, MATERIAL
146655-715
PC BOARD ASY
10-08-90
CAD DWG.
24V-120V
SIGNAL RETURN
STER RET
P1
EAGLET
P2
EAGLET
P3
EXT. BOX
P4
STERILIZER
P5
STERILIZER
P6
DISPOSER
P7
LED'S & SWITCH
VCC
TOLERANCE STANDARD UNLESS OTHERWISE NOTED
AMERICAN STERILIZER COMPANY
ERIE, PENNSYLVANIA
TITLE
PC BOARD ASS'Y
DISPOSER INTERFACE
FIRST MADE FOR
146655-715

DWG NO 146653-874/875 | SHEET 2

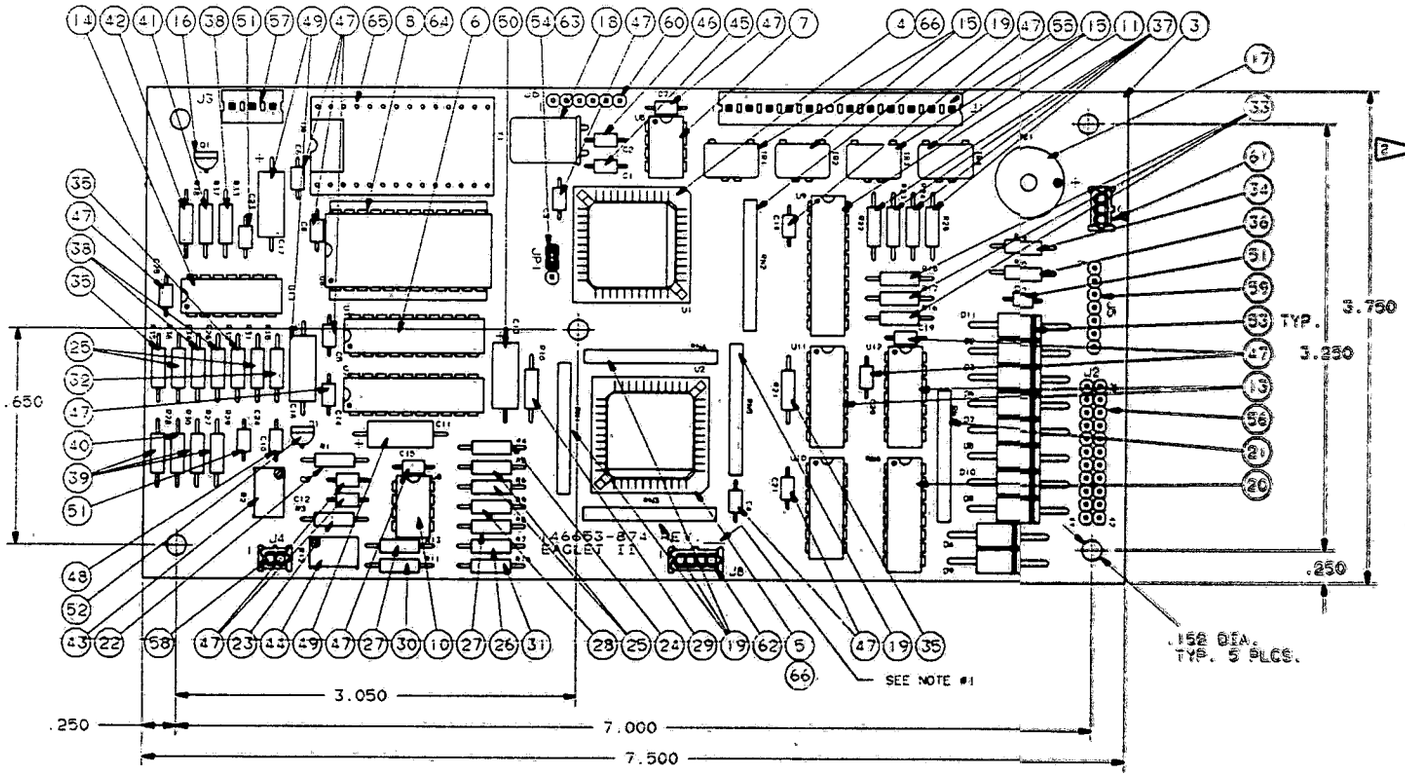

QUANTITY			PART NUMBER	NO	PART NAME	DESCRIPTION MATERIAL		
		X	146653-874	1	CONTROL BD.	90% STERILIZER	2	11-06-89
	X		146653-875	2	CONTROL BD.	ETO DISPOSER	2	11-06-89
1	1	1	136606-995	3	BARE BOARD			
1	1	1	129360-191	4	MICROCOMPUTER	U1 80C31		
1	1	1	129360-447	5	[illegible]	U2 62256		
1	1	1	129360-164	6	DUAL TRANS. LINE	U3 74HC1373		
1	1	1	129360-327	7	POWER SUPPLY SUP	U5 DST239		
1	1	1	129360-849	8	RAM AND CLOCK	U6 MK48T02		
1	1	1	93902-366	9	A/D CONVERTER	U7 ADC0804		
1	1	1	93902-366	10	DUAL OPERATION AMP	U8 LM358A		
1	1	1	129357-531	11	[illegible]	U9 74LS04		
1	1	1	129046-001	12	HEX BUFFER	U10 7406		
2	2	2	129356-050	13	[illegible]	U11, U12 74LS14		
1	1	1	129361-075	14	DRV AND RECEIVER	U13 LM324		
4	4	4	129362-770	15	[illegible]	U1, U2, U3, U4 DS8T10		
1	1	1	93909-480	16	TRANSISTOR	Q		
1	1	1	93909-976	17	BUZZER	BZ		
1	1	1	129360-581	18	CRYSTAL	Y1 11.0592 MHZ		
5	5	5	129330-004	19	NETWORK RESISTOR	RN1, RN2, RN3, RN4, RN5		
1	1	1	129361-079	20	NETWORK RESISTOR	RN6 270Ω		
1	1	1	93910-009	21	NETWORK RESISTOR	RN7 2.2K		
1	1	1	93910-023	22	RESISTOR, 560Ω	R1		
1	1	1	93910-024	23	RESISTOR, 680Ω	R3		
1	1	1	56933-153	24	RESISTOR, 680Ω	R4		
4	4	4	56933-182	25	RESISTOR, 800K	R5, R6, R31, R32		
1	1	1	93910-033	26	RESISTOR, 1.0K	R7		
2	2	2	93910-066	27	RESISTOR, 2.49K	R8, R10		
1	1	1	93910-069	28	RESISTOR, 5.36K	R9		
1	1	1	93910-081	29	RESISTOR, 27.4K	R11		
1	1	1	93910-094	30	RESISTOR, 9.09K	R14		
1	1	1	56933-175	31	RESISTOR, 5.62K	R15		
1	1	1	56933-152	32	RESISTOR, 10K	R16		
3	3	3	93910-001	33	RESISTOR, 274K	R16, R17, R18		
1	1	1	93910-008	34	RESISTOR, 5K	R19		
3	3	3	93910-005	35	RESISTOR, 2.2K	R21, R37, R38		
1	1	1	93910-079	36	RESISTOR, 100Ω	R20		
4	4	4	93910-002	37	RESISTOR, 432K	R22, R23, R24, R25		
3	3	3	93910-090	38	RESISTOR, 1M	R26, R33, R34		
3	3	3	93910-091	39	RESISTOR, 2.2M	R27, R28, R29		
1	1	1	93910-092	40	RESISTOR, 3.3M	R30		
1	1	1	93910-077	41	RESISTOR, 3.9M	R35		
1	1	1	56933-151	42	RESISTOR, 1K	R36		
1	1	1	129357-522	43	RESISTOR, 200Ω	R7 200Ω		
1	1	1	129357-523	44	RESISTOR, 500Ω	R12 500Ω		
1	1	1	56396-697	45	CAPACITOR, 1.0µF	C1		
1	1	1	56396-699	46	CAPACITOR, 3.0µF	C2		
15	15	15	129322-822	47	CAPACITOR, 0.1µF	[illegible]		
1	1	1	56396-701	48	CAPACITOR, 50.0µF	C10		
3	3	3	56396-691	49	CAPACITOR, 0.1µF	C14, C16, C17		
1	1	1	56396-692	50	CAPACITOR, 1.0µF	C15		
3	3	3	56396-707	51	CAPACITOR, 0.01µF	C22, C23, C24		
1	1	1	93902-386	52	DIODE, 1N3787	D1		
10	10	10	129360-182	53	DIODE BRIDGE, 2A	D2 [illegible]		
1	1	1	129360-607	54	JUMPER	JP1		
1	1	1	93909-972	55	HEADER PIN	J1 11 POS		
1	1	1	129361-077	56	HEADER PIN	J2 22 POS		
1	1	1	93909-974	57	HEADER PIN	J3 3 POS		
1	1	1	93909-774	58	HEADER PIN	J4 2 POS		
1	1	1	129360-606	59	HEADER PIN	J5 7 POS		
1	1	1	129361-081	60	HEADER PIN	J6 6 POS		
1	1	1	93909-775	61	HEADER PIN	J7 3 POS		
1	1	1	93910-014	62	HEADER PIN	J8 4 POS		
1	1	1	129357-227	63	SHUNT			
1	1	1	93210-001	64	SOCKET, IC	24 POS		
1	1	1	129357-228	65	SOCKET, IC	28 POS		
2	2	2	93909-145	66	SOCKET, 68P	DAPPER		

NOTES

1 STAMP (LATEST REVISION NUMBER) USING (TYPE OF STAMP)

2 TOP SEALING TAB SHOULD BE REMOVED AFTER MARKING OPERATION. (THIS NOTE SHOULD APPEAR ON ALL ASSEMBLIES CALLING OUT THIS PART.)

3 ENGRAVE SERIALIZE FILE NAME [illegible]

TOLERANCE STANDARD UNLESS OTHERWISE NOTED	FRACTIONAL ±1/64 ANGULAR ±1/2°	DECIMAL ±.005 MACH SURF 125
2	11-06-89	PA #67
1	5-23-89	PA #17
0	3-15-89	PEP #6

THE CONTROL BOARD EAGLET II

146653-874/875 | SHEET 2

146653-874/875 2 SHEET 2

QUANTITY	PART NUMBER	ITEM NO	PART NAME	DESCRIPTION, MATERIAL	REV NO	REVISION DATE
	146653-874/875		CONTROL BD.		2	11-06-89

CAD DWG.

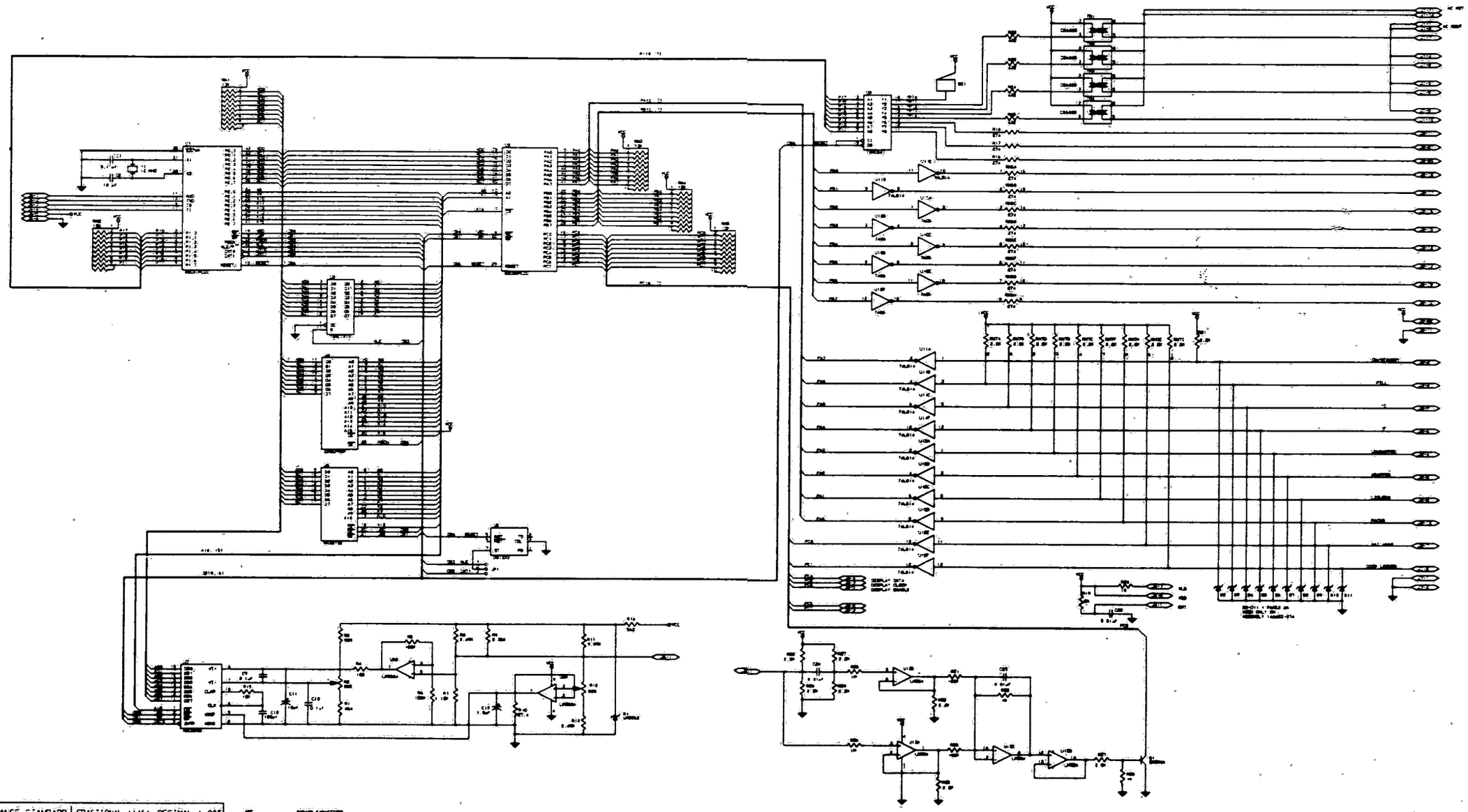

TOLERANCE STANDARD UNLESS OTHERWISE NOTED. FRACTIONAL ±1/64 DECIMAL ±.005 ANGULARITY±1° MACH SURF 125

AMERICAN STERILIZER COMPANY ERIE, PENNSYLVANIA

TITLE CONTROL BOARD EAGLET II

FIRST MADE FOR

DWG NO 146653-874/875 2 SHEET 2

CAD DWG

E-1 E-2

THIS PAGE
INTENTIONALLY LEFT
BLANK

DRAWING NUMBER	MATERIAL	REV. NO.	REVISION DATE
		0	10-5-89

SHEET 1 OF 1

DWG. NO. P-764323-249

REPRO. MAINTAINED AT:

KIT, SERVICE REPAIR

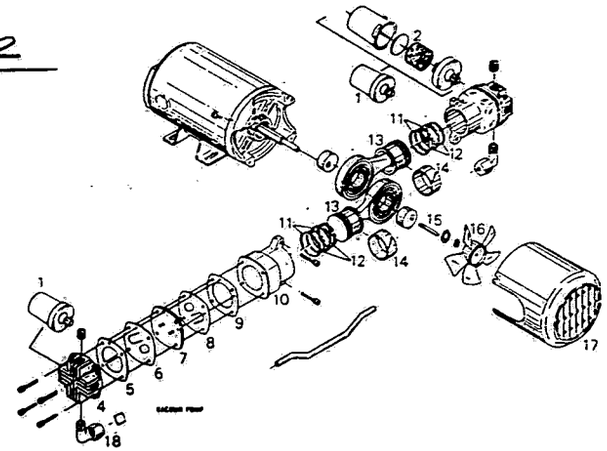

GAST PUMP MODEL NUMBER
IS 4VCF-1D-M400X

MFR
GAST MFR CORP
BENTON HARBOR, MICH.

AMSCO PART NUMBER
FOR COMPLETE PUMP
IS P-764323-248

Ref. No.	Description	Part Qnty.	PT. NO.
• 2	Felt	2	8344A
• 5	Head Gasket	2	AF520A
• 6	Valve, Outlet	2	AF545
• 8	Valve, Inlet	2	AF544
• 9	Gasket, Cylinder	2	AF521
•11	Piston Ring	4	AF541
•12	Piston Seal	4	AF540
•14	Rider Ring	2	AF595
•18	Manifold Sleeve	2	AF567A
	Service Kit	1	K263

•Denotes parts included in service kit.

NO.	DATE	E.C.A. NUMBER	REVISIONS
0	10-5-89		

BRUNING 40-21 41470-8

AMERICAN STERILIZER COMPANY
ERIE, PENNSYLVANIA

THIS DRAWING, SPECIFICATIONS, AND ALL INFORMATION THEREIN ARE THE PROPERTY OF AMERICAN STERILIZER COMPANY, ARE TO BE MAINTAINED CONFIDENTIAL, ARE NOT TO BE COPIED OR USED IN ANY WAY DETRIMENTAL TO THE INTEREST OF AMERICAN STERILIZER COMPANY AND SHALL BE RETURNED ON REQUEST.

TITLE: KIT, SERVICE REPAIR FOR PUMP P-764323-248

TOLERANCES UNLESS OTHERWISE SPECIFIED: MACHINED SURF. 125
FRACTIONAL DIMS. ± 1/64 DECIMAL DIMS. ± .005 ANGULARITY ± 1°
FIRST MADE FOR:

AMSCO

DWN. RAM	CKD.	ENG. JAK	MFG.
DATE 10-89	DATE	DATE 10-5-89	DATE

DWG. NO. P-764323-249 | SHEET 1 OF 1

PRINTED IN U.S.A. © AMSCO 19__

FORM OS 592

REF.

CAD DWG.

DWG. NO. 755716-132 | SHEET 1 OF 2

QUANTITY				PART NUMBER	ITEM NO.	PART NAME	DESCRIPTION, MATERIAL	REV NO	REVISION DATE
			X	755716-132	1	KIT, DISPOSER	WATER TRAP	0	6-9-92
			1	150822-048	2	VALVE, BALL			
			1	93910-653	3	TRAP, WATER			
			1	22472-091	4	BUSHING, RED.	3/4NPT X 1/4NPT		
			1	45407-091	5	ELBOW, COMP.	1/4NPT X 1/4ODT		
			1	34218-091	6	FITTING, STR.	1/4OD X 1/4"NPT		
			12	R915-103	7	TUBING, COPPER	1/4OD X 144" LG		
			1	28917-091	8	NIPPLE, BRASS	1/4NPT X 1" LG		

THE PURPOSE OF THE WATER TRAP IS TO PREVENT WATER FROM ENTERING THE EXHAUST PIPING TO THE DISPOSER. EXCESS WATER IN THE EXHAUST PIPING CAN CAUSE DISPOSER PUMP FAILURE.

THE WATER TRAP CONSISTS OF THE TRAP, MISCELLANEOUS PIPE FITTINGS, AND A SHUT OFF VALVE. THE WATER TRAP USES A FLOATING BALL THAT WILL CHOKE THE AIR FLOW TO THE DISPOSER PUMP WHEN THE TRAP FILLS WITH WATER. THE DISPOSER WILL THEN NO LONGER BE ABLE TO PULL VACUUM FROM THE STERILIZER AND AN ALARM ON THE STERILIZER WILL OCCUR (EITHER A DISPOSER FLOW ALARM OR A TOO LONG IN STEP ALARM).

THE 1/4" LINE ON THE BOTTOM OF THE TRAP ALLOWS THE TRAP TO SELF DRAIN SMALL AMOUNTS OF COLLECTED WATER DURING THE STERILIZER WATER DUMP PHASE. THE SHUTOFF VALVE AT THE BOTTOM OF THE TRAP IS TO BE LEFT OPEN DURING NORMAL OPERATION. IT IS TO BE CLOSED ONLY WHEN IT IS NECESSARY TO PERFORM A VACUUM LEAK TEST ON THE EXHAUST PIPING.

IF EXCESS AMOUNTS OF WATER ARE FOUND AFTER INSTALLATION OF THE TRAP, LOOK AT THE FOLLOWING AREAS:

1. FAULTY DRAIN LINE CHECK VALVE
2. FAULTY VACUUM PUMP WATER INLET SOLENOID VALVE
3. IMPROPER STEAM CONDITION SETTING
4. POOR QUALITY STEAM
5. IMPROPERLY LEVELED STERILIZER

REPRO MAINTAINED AT

TOLERANCE STANDARD UNLESS OTHERWISE NOTED | FRACTIONAL ±1/64 DECIMAL ±.005 ANGULARITY±1° MACH. SURF 125

NO.	DATE	E.C.A. NUMBER	NO.	DATE	E.C.A. NUMBER
0	6-9-92				

REVISIONS REVISIONS

© AMSCO 1990

AMERICAN STERILIZER COMPANY
ERIE, PENNSYLVANIA

THIS DRAWING, SPECIFICATIONS, AND ALL INFORMATION THEREIN ARE THE PROPERTY OF AMERICAN STERILIZER COMPANY, ARE TO BE MAINTAINED CONFIDENTIAL, ARE NOT TO BE COPIED OR USED IN ANY WAY DETRIMENTAL TO THE INTEREST OF AMERICAN STERILIZER COMPANY AND SHALL BE RETURNED UPON REQUEST.

AMSCO

DWN	CKD	ENG	MFG
BMS	JB		
DATE 6-9-92	DATE 6-9-92	DATE	DATE

TITLE KIT, DISPOSER WATER TRAP

FIRST MADE FOR:

DWG. NO. 755716-132 | SHEET 1 OF 2

REF.

CAD DWG.

DWG. NO.	SHEET OF
755716-132	2 OF 2

QUANTITY	PART NUMBER	ITEM NO.	PART NAME	DESCRIPTION, MATERIAL	REV NO	REVISION DATE
	755716-132	1	KIT, DISPOSER	WATER TRAP	0	6-9-92

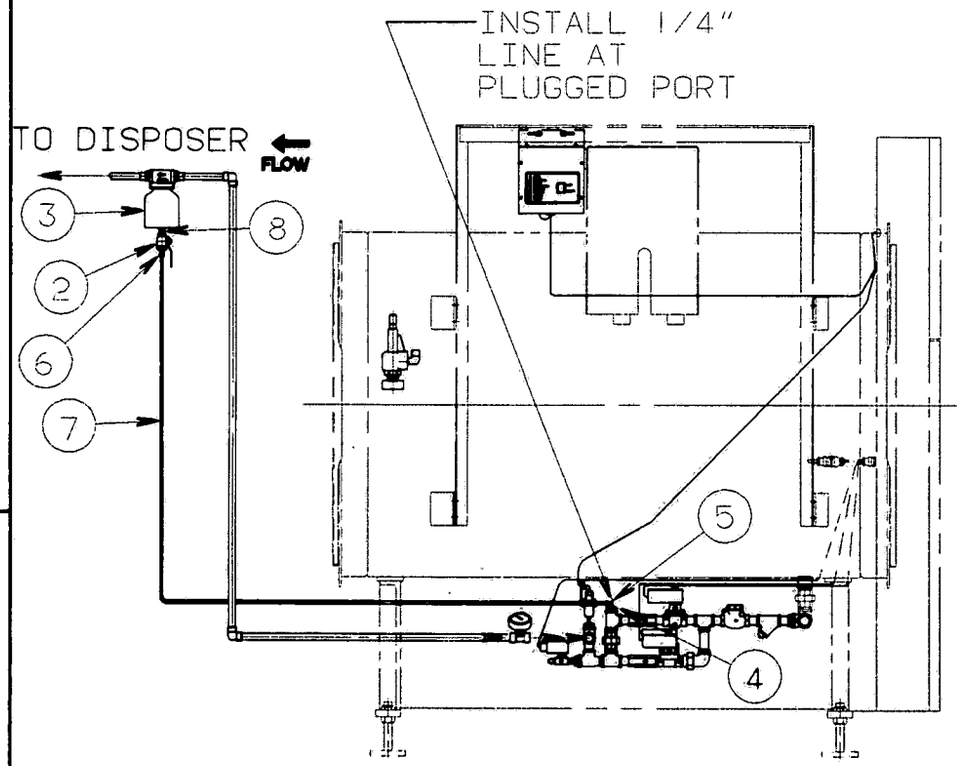

MEDIUM STERILIZER TYPICAL

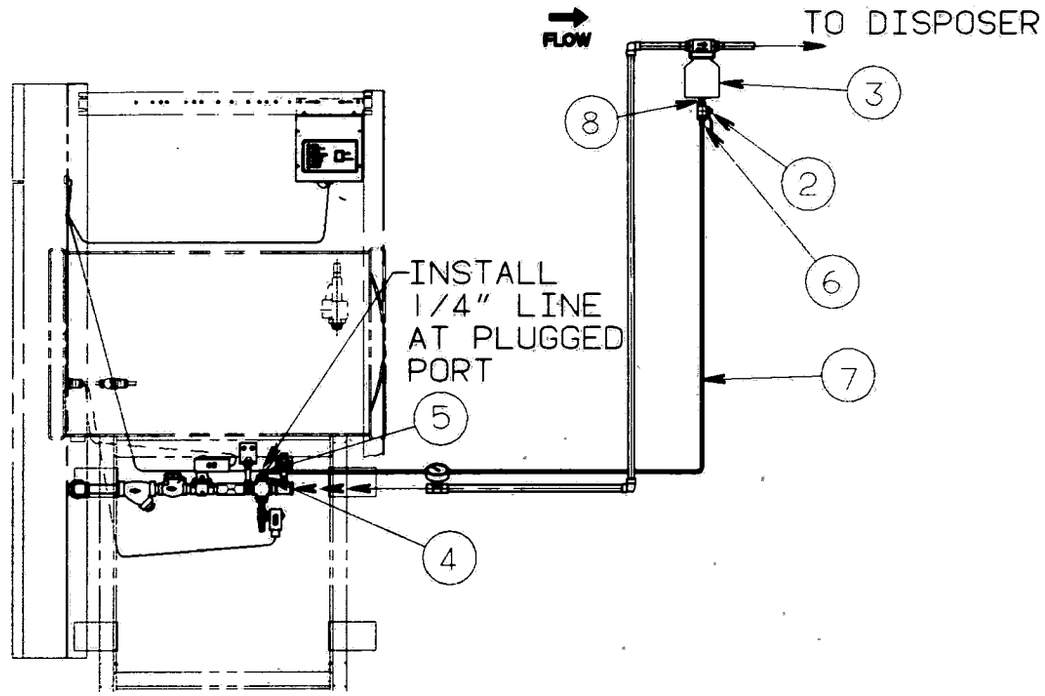

SMALL STERILIZER TYPICAL

REPRO MAINTAINED AT

TOLERANCE STANDARD UNLESS OTHERWISE NOTED	FRACTIONAL ±1/64 DECIMAL ±.005 ANGULARITY±1° MACH. SURF 125

NO.	DATE	E.C.A. NUMBER	NO.	DATE	E.C.A. NUMBER
REVISIONS			REVISIONS		

AMERICAN STERILIZER COMPANY
ERIE, PENNSYLVANIA

THIS DRAWING, SPECIFICATIONS, AND ALL INFORMATION THEREIN ARE THE PROPERTY OF AMERICAN STERILIZER COMPANY. ARE TO BE MAINTAINED CONFIDENTIAL, ARE NOT TO BE COPIED OR USED IN ANY WAY DETRIMENTAL TO THE INTEREST OF AMERICAN STERILIZER COMPANY AND SHALL BE RETURNED UPON REQUEST.

AMSCO

DWN	CKD	ENG	MFG
BMS			
DATE 6-9-92	DATE	DATE	DATE

TITLE KIT, DISPOSER WATER TRAP

FIRST MADE FOR:

DWG. NO. 755716-132 — SHEET 2 OF 2

© AMSCO 1990

INSTALLATION INSTRUCTIONS:

THE VS 23 SWITCH IS TO BE INSTALLED AT THE POINT WHERE THE 3/4" ODT EXHAUST LINE CONNECTS WITH THE STERILIZERS PIPING. SEE FIGURE

1. INSTALL VS23 SWITCH IN EXHAUST PIPING AS SHOWN. NOTE THAT SWITCH IS TO BE LOCATED AT THE POINT WHERE THE STERILIZERS EXHAUST LINE CONNECTS TO THE 3/4ODT COPPER TUBING.

   SWITCH MUST BE INSTALLED AS VERTICAL AS POSSIBLE.

2. INSTALL CABLE AT VS23 AND P53 PLUG AS SHOWN.

3. STERILIZER MUST HAVE REV 11 PROGRAM CHIP OR LATER.

4. ADJUST VS23 SO THAT SWITCH ACTUATES WHEN CHAMBER IS AT 23" HG.

BILL OF MAT'L

ITEM	QTY	PART NO.	PART NAME	DESCRIPTION
1	1	84323-001	REDUCING TEE	3/4 X 3/4 X1/4
2	1	939-091	BUSHING	1/4 X 1/8
3	1	29291-091	NIPPLE	3/4 X 1"1/4 LG.
4	1	28899-091	NIPPLE	1/8 X 1" LG.
5	1	83866-001	VACCUM SWITCH	
6	1	93910-654	CABLE	
7	1	93909-980	BRACKET	
8	1	76262-091	SNAP RING	
9	2	3984-041	SCREW	*6-32 X 3/8"LG.
10	2	19675-041	LOCKWASHER	
11	4	129326-001	HARNESS MOUNT	
12	6	84104-001	WIRE TIE	
13	W-	755716-164	INSTALLATION INSTRUCTION	

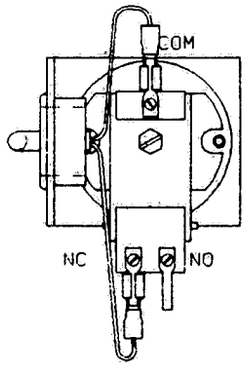

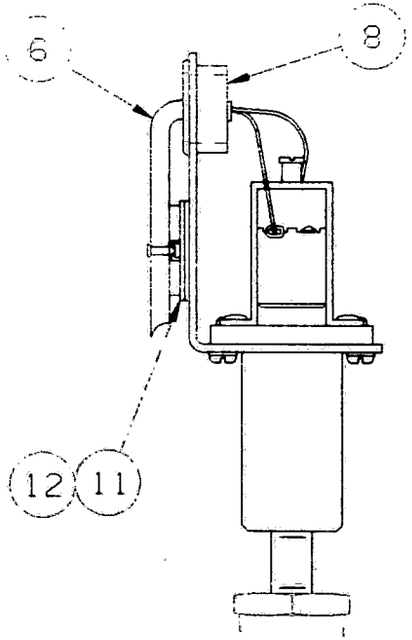

VIEW A-A
VACUUM SWITCH

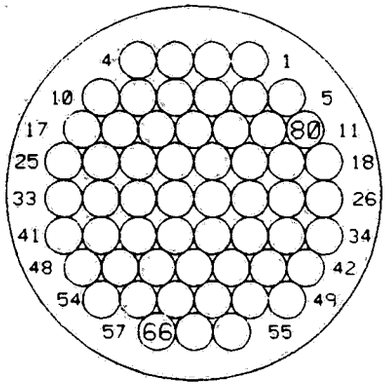

VIEW B-B
P53
SHOWN ENLARGED FOR CLARITY

KIT, VS23 INSTALLATION

P\N 755716-164
REV 0 DATE 07/23/92
PAGE 1 OF 2

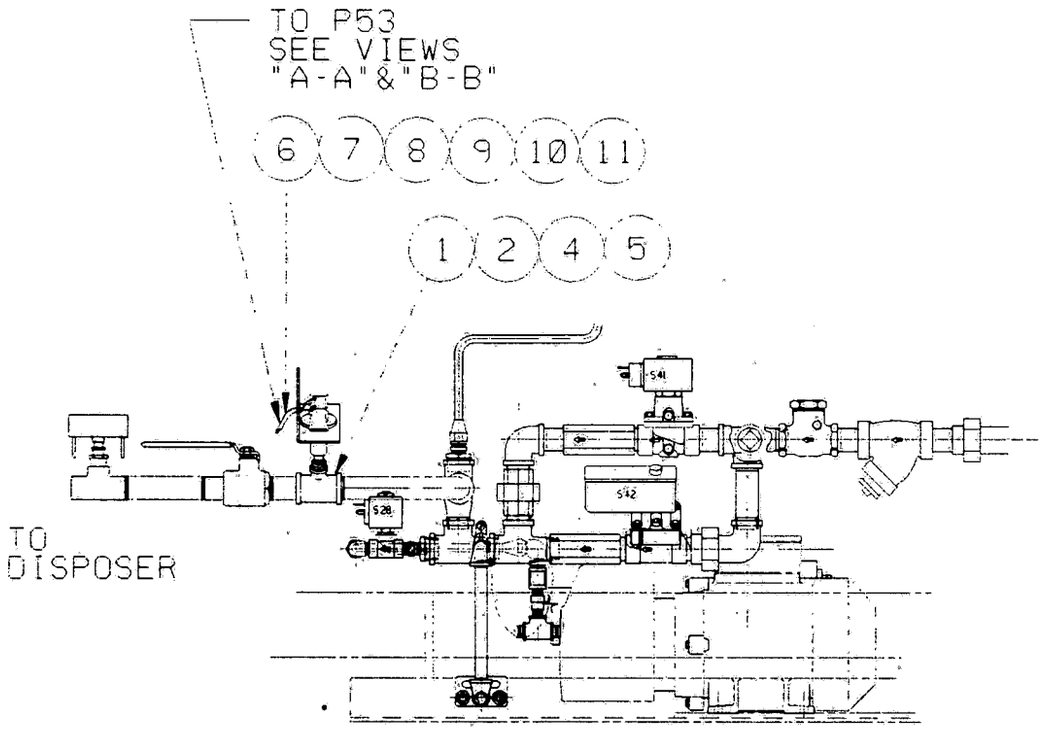

24 X 36

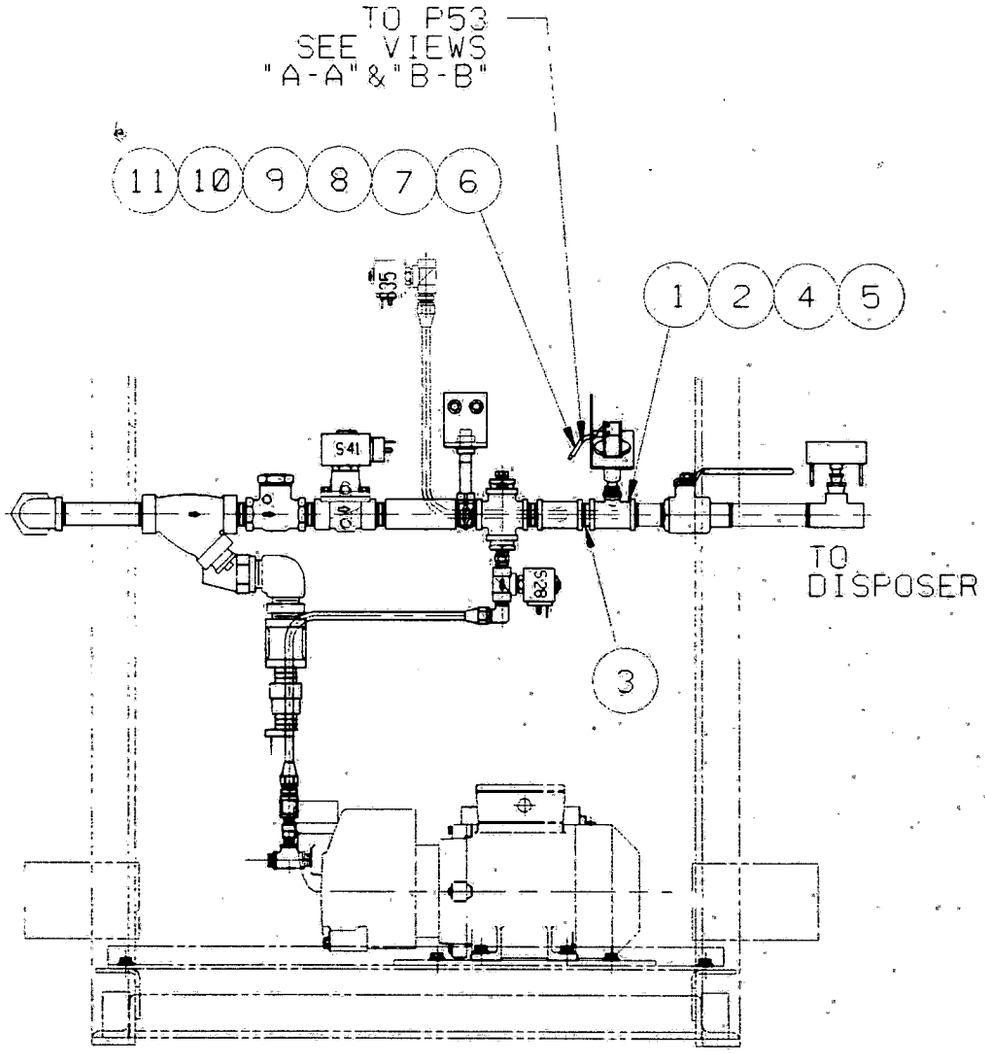

20 X 20

KIT. VS23 INSTALLATION

P/N 755716-164
REV 0 DATE 07/23/92
PAGE 2 OF 2

AMSCO

EAGLE SERIES STAGE 2

INTERFACE: EAGLE 3000 & 2000, MEDALLION, AERATION CABINET

P-764323-254
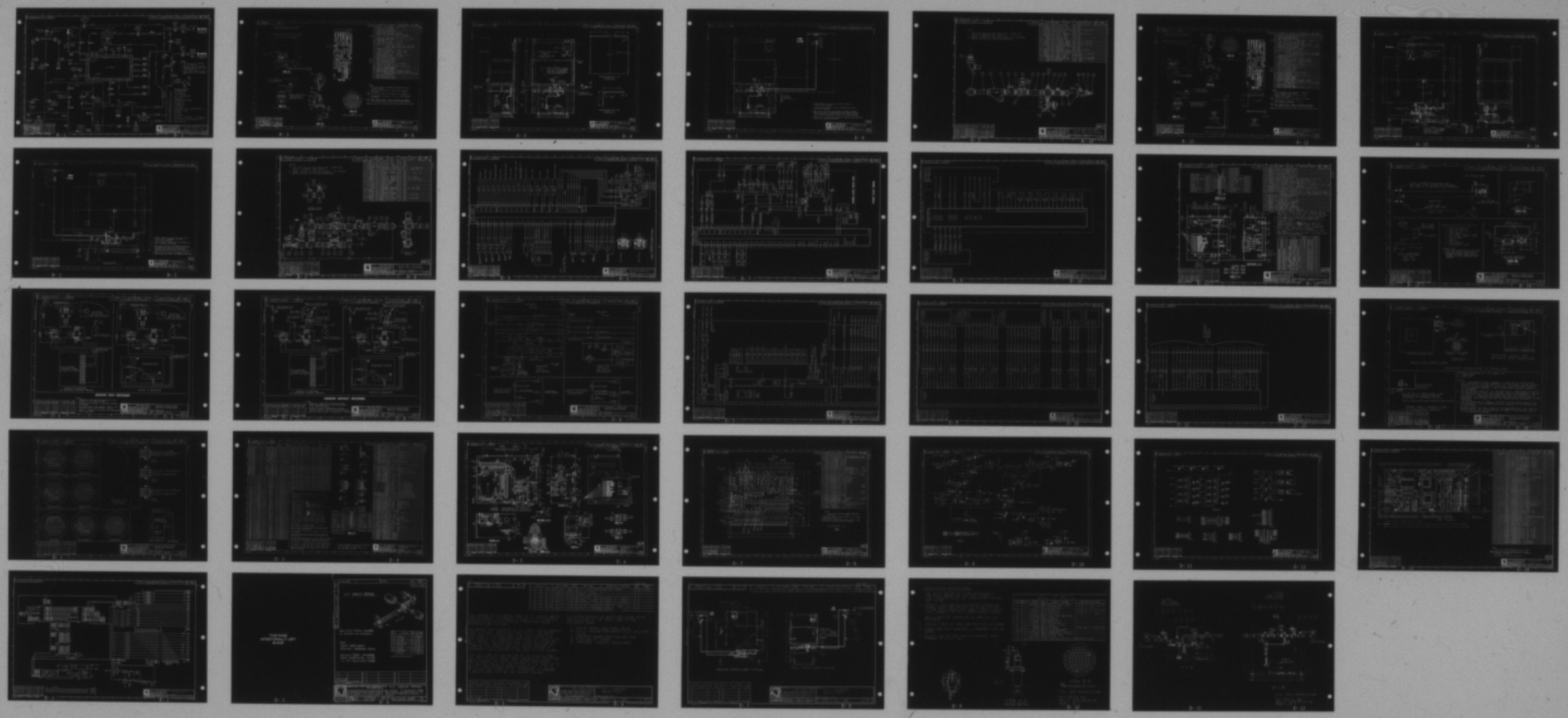
9/92